OPERATOR'S MANUAL

MODEL #201175

8500W DUAL FUEL ELECTRIC START INVERTER GENERATOR

REGISTER YOUR PRODUCT ONLINE

at **championpowerequipment.com**

TAKE IT OUTSIDE™

TAKEYOURGENERATOROUTSIDE.COM

1·877·338·0999

or visit **championpowerequipment.com**

SAVE THESE INSTRUCTIONS. This manual contains important safety precautions which should be read and understood before operating the product. Failure to do so could result in serious injury. This manual should remain with the product.

Specifications, descriptions and illustrations in this manual are as accurate as known at the time of publication, but are subject to change without notice.

This product meets the requirements of the PGMA (Portable Generator Manufacturers' Association) standard ANSI/PGMA G300-2018 (Safety and Performance of Portable Generators).

Covered by one or more of the following U.S. Patent Numbers: 10,862,414, 10,641,187 and other U.S. and foreign patents pending.

4129-M-OP | REV 20230323 | EN

Champion Power Equipment, Inc., Santa Fe Springs, CA USA

TAKE IT OUTSIDE™

CARBON MONOXIDE KILLS

CARBON MONOXIDE SAFETY: THE BIG PICTURE

As the only safe way to use a portable generator, taking your generator outside is absolutely mandatory to keep your family safe from carbon monoxide. But there's even more you can do. By educating yourself about all carbon monoxide risks, you'll be better prepared to protect your family from this colorless, oderless threat.

ALWAYS READ THE OPERATOR'S MANUAL FIRST

KNOW THE SYMPTOMS

- Headache
- Nausea
- Shortness of breath
- Dizziness
- Fatigue

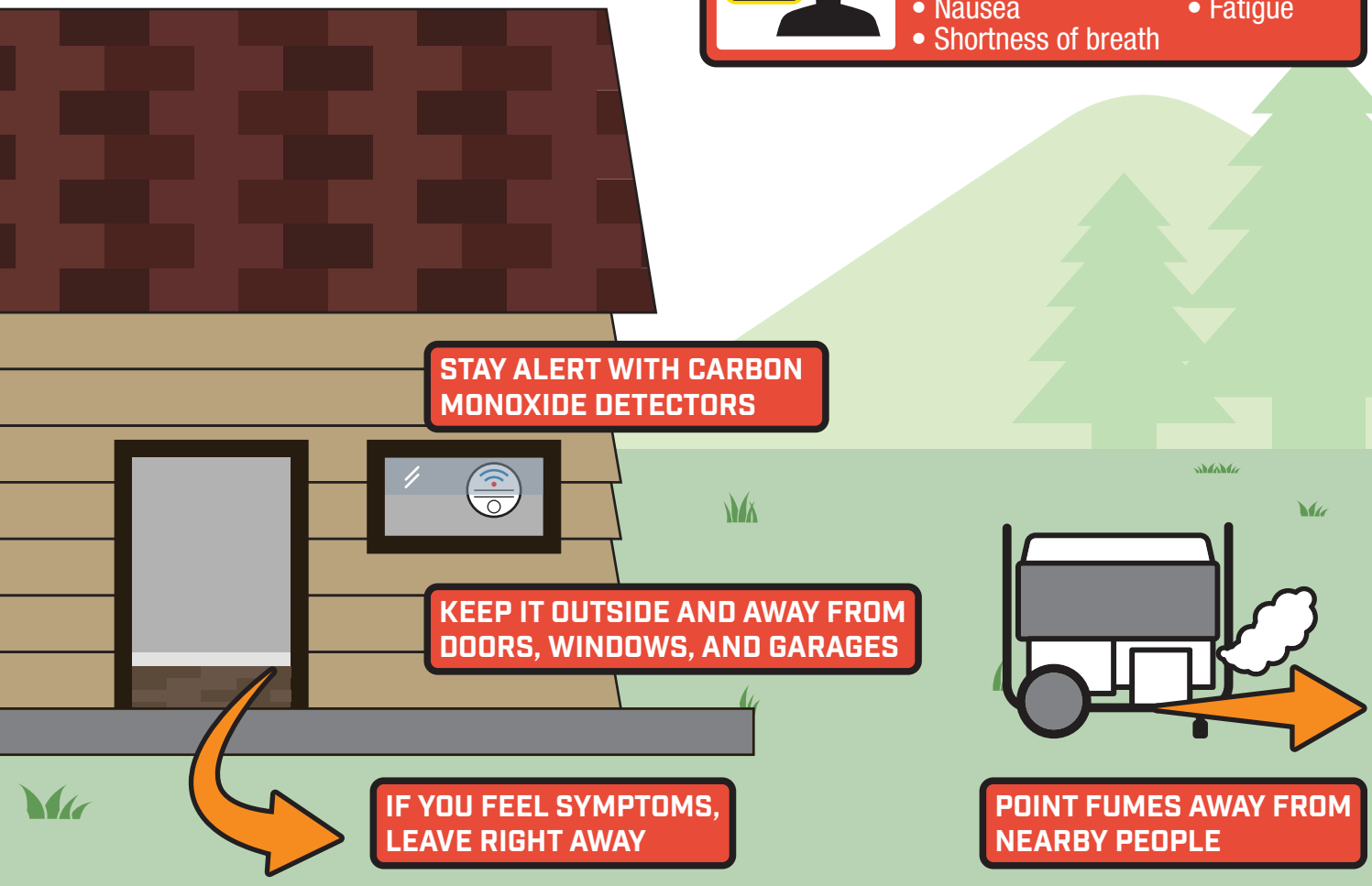

www.TakeYourGeneratorOutside.com

TABLE OF CONTENTS

Introduction **4**

Safety Definitions **4**

Important Safety Instructions **5**

Fuel Safety 7
Safety and Dataplate Labels 9
Safety Symbols 10
Operation Symbols 11
Quick Start Label Symbols 12

Controls and Features **13**

Generator 13
Control Panel 14
EZ Start Dial 14
Intelligauge with Power Meter and CO Shield® 15
FCC Statement 16
Parts Included 16
Tools Needed 16
Tools Included 16

Assembly **17**

Unpacking 17
Remove Shipping Support Hardware 17
Install the Wheel Kit 17
Connect the Battery 18
Add Engine Oil 18
Add Fuel: Gasoline 19
Add Fuel: Propane (LPG) 20
Grounding 21

Operation **21**

CO Shield® - Carbon Monoxide (CO) Detection and Auto-shutoff System 21
Surge Protection 23
Starting the Engine: Gasoline 23
Starting the Engine: Propane (LPG) 25
Battery 27
Connecting Electrical Loads 28
Do Not Overload Generator 28
GFCI 29
Eco (Economy) Mode 29
12V DC Regulated Automotive Style Outlet 29
Stopping the Engine 30
Moving the Generator 30
Operation at High Altitude 31

Maintenance **31**

Cleaning the Generator 31
Changing the Engine Oil 32
Cleaning and Adjusting the Spark Plug 33
Cleaning the Air Filter 33
Cleaning the Spark Arrestor 34
Adjusting the Governor 34
Generator Battery 34
Maintenance Schedule 35

Storage **35**

Short Term Storage (up to 30 days) 35
Mid Term Storage (30 days – 1 year) 36
Long Term Storage (more than 1 year) 36
LPG Storage 36
Removing from Storage: Gasoline 37
Removing from Storage: Propane (LPG) 37

Specifications **38**

Generator Specifications 38
Engine Specifications 38
Oil Specifications 38
Fuel Specifications 38
Battery Specifications 38
Temperature Specifications 38

Troubleshooting **39**

FOR PARTS BREAKDOWN

Search by model number at
championpowerequipment.com

INTRODUCTION

Congratulations on your purchase of a Champion Power Equipment (CPE) product. CPE designs, builds, and supports all of our products to strict specifications and guidelines. With proper product knowledge, safe use, and regular maintenance, this product should bring years of satisfying service.

Every effort has been made to ensure the accuracy and completeness of the information in this manual at the time of publication, and we reserve the right to change, alter and/or improve the product and this document at any time without prior notice.

CPE highly values how our products are designed, manufactured, operated, and serviced as well as providing safety to the operator and those around the generator. Therefore, it is IMPORTANT to review this product manual and other product materials thoroughly and be fully aware and knowledgeable of the assembly, operation, dangers and maintenance of the product before use. Fully familiarize yourself, and make sure others who plan on operating the product fully familiarize themselves too, with the proper safety and operation procedures before each use. Please always exercise common sense and always err on the side of caution when operating the product to ensure no accident, property damage, or injury occurs. We want you to continue to use and be satisfied with your CPE product for years to come.

When contacting CPE about parts and/or service, you will need to supply the complete model and serial numbers of your product. Transcribe the information found on your product's nameplate label to the table below

CPE TECHNICAL SUPPORT TEAM
1-877-338-0999
MODEL NUMBER
201175
SERIAL NUMBER
DATE OF PURCHASE
PURCHASE LOCATION

SAFETY DEFINITIONS

The purpose of safety symbols is to attract your attention to possible dangers. The safety symbols, and their explanations, deserve your careful attention and understanding. The safety warnings do not by themselves eliminate any danger. The instructions or warnings they give are not substitutes for proper accident prevention measures.

⚠ DANGER

DANGER indicates a hazardous situation which, if not avoided, will result in death or serious injury.

⚠ WARNING

WARNING indicates a hazardous situation which, if not avoided, could result in death or serious injury.

⚠ CAUTION

CAUTION indicates a hazardous situation which, if not avoided, could result in minor or moderate injury.

NOTICE

NOTICE indicates information considered important, but not hazard-related (e.g., messages relating to property damage).

IMPORTANT SAFETY INSTRUCTIONS

⚠ WARNING

Cancer and Reproductive Harm – www.P65Warnings.ca.gov

⚠ DANGER

Generator exhaust contains carbon monoxide, a colorless, odorless, poisonous gas. Breathing carbon monoxide will cause nausea, dizziness, fainting or death. If you start to feel dizzy or weak, get to fresh air immediately.

OPERATE GENERATOR OUTDOORS ONLY IN A WELL VENTILATED AREA AND POINT EXHAUST AWAY.

DO NOT operate the generator inside any building, including garages, basements, crawlspaces and sheds, enclosure or compartment, including the generator compartment of a recreational vehicle.

DO NOT allow exhaust fumes to enter a confined area through windows, doors, vents or other openings.

⚠ DANGER

Using a generator indoors **CAN KILL YOU IN MINUTES**. Generator exhaust contains carbon monoxide. This is a poison you cannot see or smell.

NEVER use inside a home or garage, **EVEN IF** doors and windows are open.

ONLY use **OUTSIDE** and far away from windows, doors, and vents.

Install battery-operated carbon monoxide alarms or plug-in carbon monoxide alarms with battery back-up according to the manufacturer's instructions.

⚠ DANGER

Tampering with the CO Shield® system will result in a hazardous condition and will void your warranty.

Removing the CO Shield® module will not allow the generator to start.

⚠ DANGER

Operate equipment with guards in place.

Rotating parts can entangle hands, feet, hair, clothing and/or accessories. Traumatic amputation or severe laceration can result.

Keep hands and feet away from rotating parts.

Tie up long hair and remove jewelry.

DO NOT wear loose-fitting clothing, dangling drawstrings or items that could become caught.

⚠ DANGER

Generator produces powerful voltage.

DO NOT touch bare wires or receptacles.

DO NOT use electrical cords that are worn, damaged or frayed. Use only Champion electrical cords for proper application.

DO NOT operate generator in wet weather.

DO NOT allow children or unqualified persons to operate or service the generator.

Use a ground fault circuit interrupter (GFCI) in damp areas and areas containing conductive material such as metal decking.

Connection to your home's electrical system requires a listed 30A transfer switch installed by a licensed electrician and approved by the local authority having jurisdiction. The connection must isolate the generator from the utility power and must comply with all applicable laws and electrical codes.

⚠ WARNING

Do not use generator for medical and life support uses.

In case of emergency, call 911 immediately.

NEVER use this product to power life support devices or life support appliances.

NEVER use this product to power medical devices or medical appliances.

Inform your electricity provider immediately if you or anyone in your household depends on electrical equipment to live.

Inform your electrical provider immediately if a loss of power would cause you or anyone in your household to experience a medical emergency.

⚠ WARNING

Spark from removed spark plug wire can result in fire or electrical shock.

When servicing the generator:

Disconnect the spark plug wire and place it where it cannot contact the plug or any other metal object.

DO NOT check for spark with the plug removed.

Use only approved spark plug testers.

⚠ WARNING

Running engines produce heat. Severe burns can occur on contact. Combustible material can catch fire on contact.

DO NOT touch hot surfaces.

Avoid contact with hot exhaust gases.

Allow equipment to cool before touching.

Maintain at least 3 ft. (91.4 cm) of clearance on all sides to ensure adequate cooling.

Maintain at least 5 ft. (1.5 m) of clearance from combustible materials.

⚠ WARNING

Rapid retraction of the recoil cord will pull hand and arm towards the engine faster than you can let go. Broken bones, fractures, bruises or sprains could result. Unintentional startup can result in entanglement, traumatic amputation or laceration.

When starting engine, pull the recoil cord slowly until resistance is felt and then pull rapidly to avoid kickback.

DO NOT start or stop the engine with electrical devices plugged in and turned on.

⚠ WARNING

Although the generator contains a spark arrester, maintain a minimum distance of 5 ft. (1.5 m) from dry vegetation to prevent fires.

⚠ CAUTION

Exceeding the generator's running capacity can damage the generator and/or electrical devices connected to it.

DO NOT overload the generator.

DO NOT tamper with the governed speed.

DO NOT modify the generator in any way.

⚠ CAUTION

Start the generator and allow the engine to stabilize before connecting electrical loads.

Connect electrical equipment in the off position, and then turn them on for operation.

Turn electrical equipment off and disconnect before stopping the generator.

⚠ CAUTION

Improper treatment or use of the generator can damage it, shorten its life or void the warranty.

Use the generator only for intended uses.

Operate only on level surfaces.

DO NOT expose generator to excessive moisture, dust, or dirt.

DO NOT allow any material to block the cooling slots.

If connected devices overheat, turn them off and disconnect them from the generator.

DO NOT use the generator if:

- Electrical output is lost
- Equipment sparks, smokes or emits flames
- Equipment vibrates excessively

Fuel Safety

⚠ DANGER

GASOLINE, GASOLINE VAPORS, AND PROPANE ARE HIGHLY FLAMMABLE AND EXPLOSIVE

Fire or explosion can cause severe burns or death.

Gasoline and gasoline vapors:

- Gasoline vapors are highly flammable and explosive.
- Gasoline vapors can cause a fire or explosion if ignited.
- Gasoline is a liquid fuel and the resulting gasoline vapors can ignite and cause a fire or explosion.
- Gasoline is a skin irritant and needs to be cleaned up immediately if spilled on skin or clothes.
- Gasoline has a distinctive odor, this will help detect potential leaks quickly.
- In any petroleum gas fire, flames should not be extinguished unless by doing so the fuel supply valve can be turned OFF. This is because if a fire is extinguished and a supply of fuel is not turned OFF, then an explosion hazard could be created.
- Gasoline vapors expand and contract with ambient temperatures. Never fill the gasoline tank past the red FULL indicator on the fuel filter, as gasoline vapors needs room to expand if temperatures rise.

⚠ WARNING

Propane/LPG (liquified petroleum gas) and LPG Vapors:

- LPG is a hydrocarbon gas that exists in a liquified form and it's vapors are highly flammable and explosive.
- LPG and it's vapors are under pressure and can cause a fire or explosion if ignited.
- LPG vapors are heavier than air and will settle in low places while dissipating.
- LPG itself is odorless and tasteless. For safety, a chemical is added to give it an odor to help detect leaks quickly.
- If a leak is detected, IMMEDIATELY turn OFF the gas supply.
- In the event of an LPG fire and only when safe to do so, first close the regulator valve OFF and then use a dry powder extinguisher to put out the fire. This is because if a fire is extinguished before the regulator valve is closed OFF, then an explosion hazard condition could be created.
- Always keep the LPG cylinder in an upright position.
- LPG is a skin irritant and can cause severe cold burns similar to frostbite.
- Always wear proper protective gloves when connecting to and disconnecting from a propane bottle.
- Always keep LPG away from sparks, open flames, pilot lights, heat and other sources of ignition.

⚠ WARNING

When adding or removing gasoline:

DO NOT light or smoke cigarettes.

Always stop the engine and allow to cool for a minimum of two minutes before refueling.

Always loosen gasoline cap slowly to release vapor pressure and to keep fuel from escaping around the gasoline cap.

Always replace and tighten the gasoline cap securely after fueling.

Never remove the gasoline cap or add gasoline while the engine is running or when the engine is hot.

Only fill or drain gasoline outdoors in a well-ventilated area.

DO NOT pump gasoline directly into the generator at the gas station.

Always store gasoline in an EPA/CARB compliant container or to transfer the gasoline to the generator.

DO NOT overfill the gasoline tank.

Always keep gasoline, propane and natural gas vapors away from sparks, open flames, pilot lights, heat and other sources of ignition.

⚠ WARNING

When starting the generator:

DO NOT attempt to start a damaged generator.

Always check that the gasoline cap, air filter, spark plug, fuel lines and exhaust system are properly in place.

Always allow spilled gasoline to evaporate fully before attempting to start the engine.

Always check the connections of the supply hose for leaks before using LPG fuel.

Always be certain that the generator is resting firmly on level ground.

⚠ WARNING

When operating the generator:

DO NOT move or tip the generator during operation.

⚠ WARNING

When transporting or servicing the generator:

Always check that the fuel valve is in the OFF position and the gasoline tank is empty.

Always check that the LPG supply hose is disconnected and stored securely away from the generator after use.

Disconnect the spark plug wire.

⚠ WARNING

When storing the generator:

Always store away from sparks, open flames, pilot lights, heat and other sources of ignition.

Never store generator, gasoline or LPG cylinders near furnaces, water heaters, or any other appliances that produce heat or have automatic ignitions.

⚠ DANGER

NEVER place a gasoline container, gasoline tank, LPG cylinder or any combustible material in the path of the exhaust stream during operation of the engine.

⚠ WARNING

Never use a gasoline container, gasoline tank, LPG connector hose, LPG cylinder or any other fuel item that is broken, cut, torn or damaged.

Safety and Dataplate Labels

These labels warn you of potential hazards that can cause serious injury. Read them carefully.

If a label comes off or becomes hard to read, contact Technical Support Team for possible replacement.

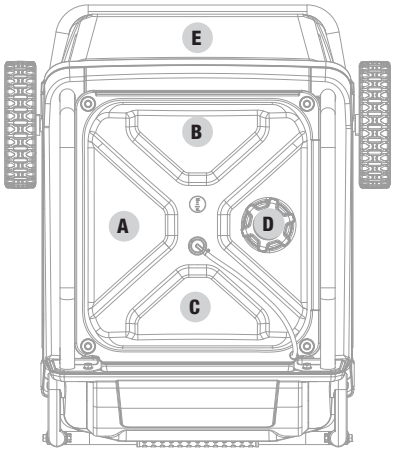

Top

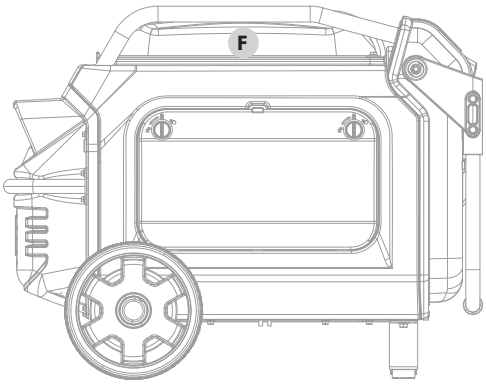

Back

	LABEL	DESCRIPTION
A	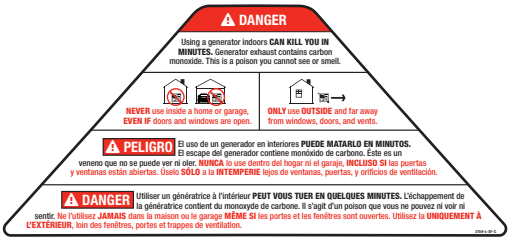	CO Danger
B		Safety Symbols
C	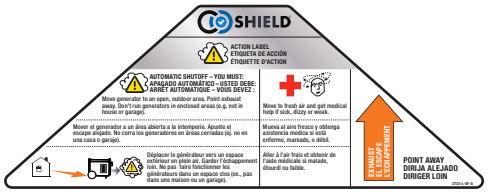	CO Shield® Action – automatic shutoff *See CO Shield® section
D		Fuel
E		Hot Surface
F	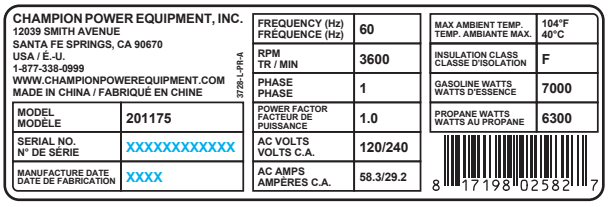	Dataplate

Safety Symbols

Some of the following symbols may be used on this product. Please study them and learn their meaning. Proper interpretation of these symbols will allow you to more safely operate the product.

SYMBOL	MEANING
	Read Operator's Manual. To reduce the risk of injury, user must read and understand operator's manual before using this product.
	Clearance. Keep all objects at least 5 feet (1.5m) from generator. Heat from the muffler and exhaust gas can ignite combustible objects.
	Ground. Consult with local electrician to determine grounding requirements before operation.
	Electric Shock. Failure to use in dry conditions and to observe safe practices can result in electric shock. Improper connections to a building can allow current to backfeed into utility lines, creating an electrocution hazard. A transfer switch must be used when connecting to a building.
	Fire/Explosion. Fuel and its vapors are extremely flammable and explosive. Fire or explosion can cause severe burns or death. Keep generator at least 5 feet (1.5m) from all objects to prevent combustion.
	Hot Surface. To reduce the risk of injury or damage, avoid contact with any hot surface.
	Open Flame Alert. Fuel and its vapors are extremely flammable and explosive. Keep fuel away from smoking, open flames, sparks, pilot lights, heat, and other ignition sources.
	Wet Conditions Alert. Do not expose to rain or use in damp locations.

Operation Symbols

Some of the following symbols may be used on this product. Please study them and learn their meaning. Proper interpretation of these symbols will allow you to more safely operate the product.

SYMBOL	MEANING
	Start
	Run
	Gasoline Operation
	Propane Operation
	Engine Stop
	Choke
	Overload Reset Button
	Low Oil
ECO	**Economy Mode Button**
	Battery Connector
	Locking Receptacle
	Circuit Breaker Reset: Push
	Ground Terminal

SYMBOL	MEANING
	Direct Current
N	**Neutral Bonded to Frame.** Neutral circuit **IS** electrically connected to the frame/ground of the generator.
	High CO Warning. Move generator to an open, outdoor area. Move to fresh air and get medical help if sick, dizzy or weak.
	CO Shield System Fault. Electrical issue, end of life.
	Gasoline Tank: Full
	Gasoline Tank: Empty
	Fastener Locked Position
	Fastener Unlocked Position
	Push Fastener Before Turning
	Power Output. Percentage of available power from generator being used.
	Propane Hose Inlet

Quick Start Label Symbols

Some of the following symbols may be used on this product. Please study them and learn their meaning. Proper interpretation of these symbols will allow you to more safely operate the product.

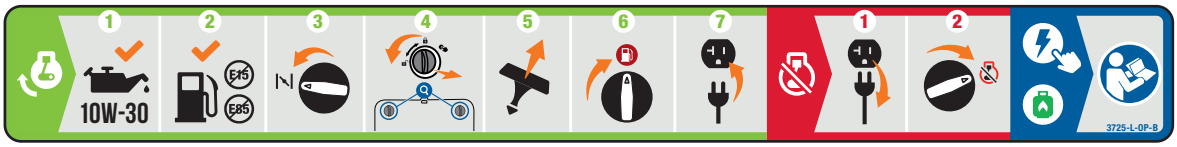

Starting the Engine

⚠ DANGER

Move generator outside and far away from windows, doors and intake ventilation covers.

1. **Check oil level.**
   Recommended oil is 10W-30.
2. **Check gasoline level.**
   When adding gasoline, use a minimum octane rating of 87 and an ethanol content of 10% or less by volume.
3. Turn **EZ Start dial** to the “CHOKE” position.
4. Remove the **maintenance cover** on the right side of the control panel.
5. Pull the **recoil cord**.
6. Turn the **EZ Start dial** to the “GASOLINE OPERATION” position.
7. Plug in desired device.

Stopping the Engine

1. Turn off and unplug all connected electrical loads.
2. Turn the **EZ Start dial** to the “ENGINE STOP” position.

For adding fuel and starting the engine with LPG see *Add Fuel: Propane (LPG)* in *Assembly* section and *Starting the Engine: Propane (LPG)* in the *Operation* section.

For Electric Start, see *Starting the Engine* section in the *Operation* section.

CONTROLS AND FEATURES

Read this operator's manual before operating your generator. Familiarize yourself with the location and function of the controls and features. Save this manual for future reference.

Generator

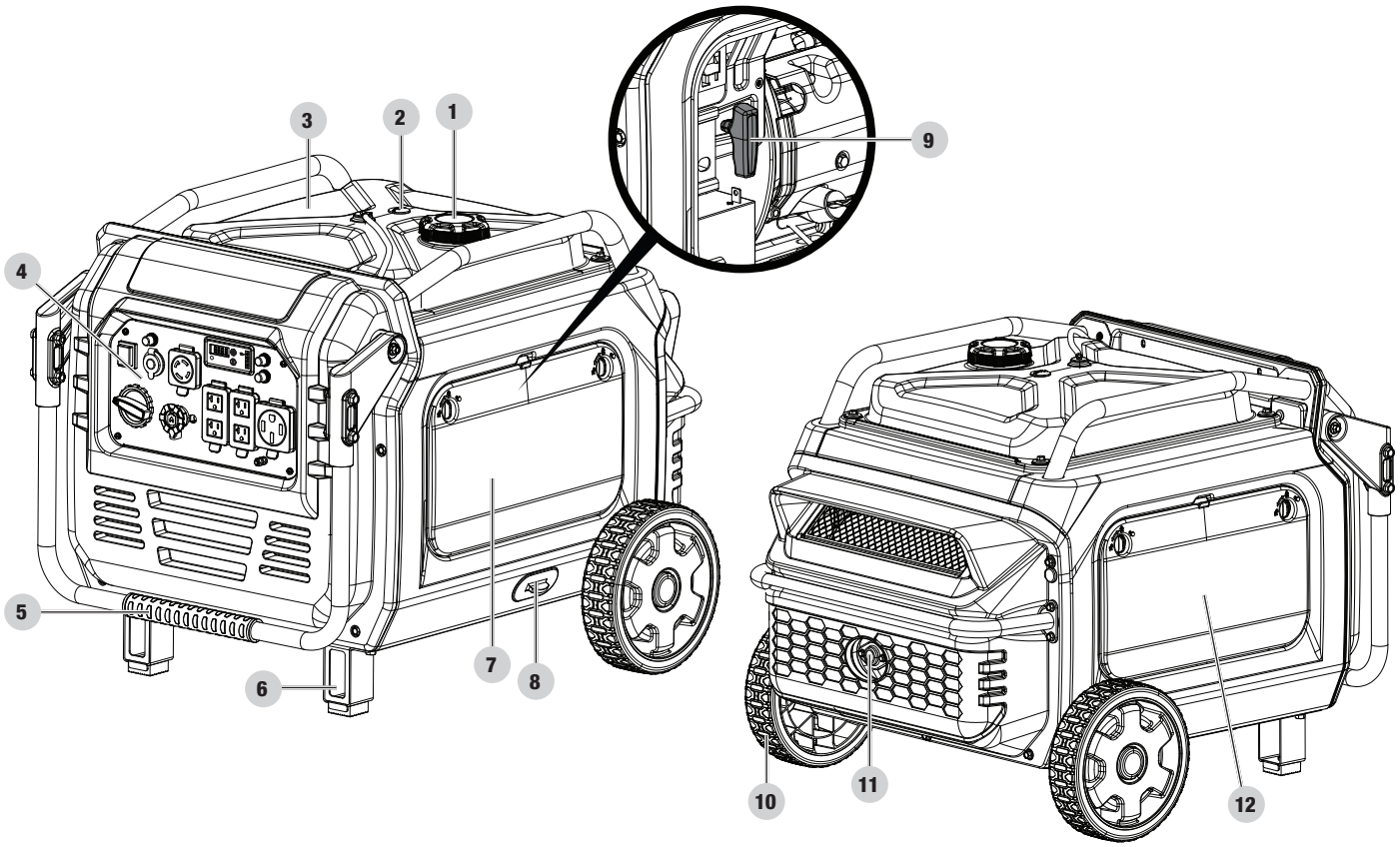

1. **Fuel Cap** – Remove to add fuel.
2. **Gasoline Gauge**
3. **Gasoline Tank** – 5.33 gal. (20.20 L)
4. **Control Panel** – See *Control Panel* section.
5. **Folding Handle** – Used to move unit by lifting and rolling on wheels. Do not use to lift or carry the unit.
6. **Support Leg**
7. **Oil Drain Hose Access Cover**
8. **Oil Drain Slot**
9. **Recoil Starter** – Used to manually start the engine (Remove cover).
10. **Never Flat Wheels** – 9.5 in. (24.1 cm)
11. **Muffler**
12. **Maintenance Cover**

Control Panel

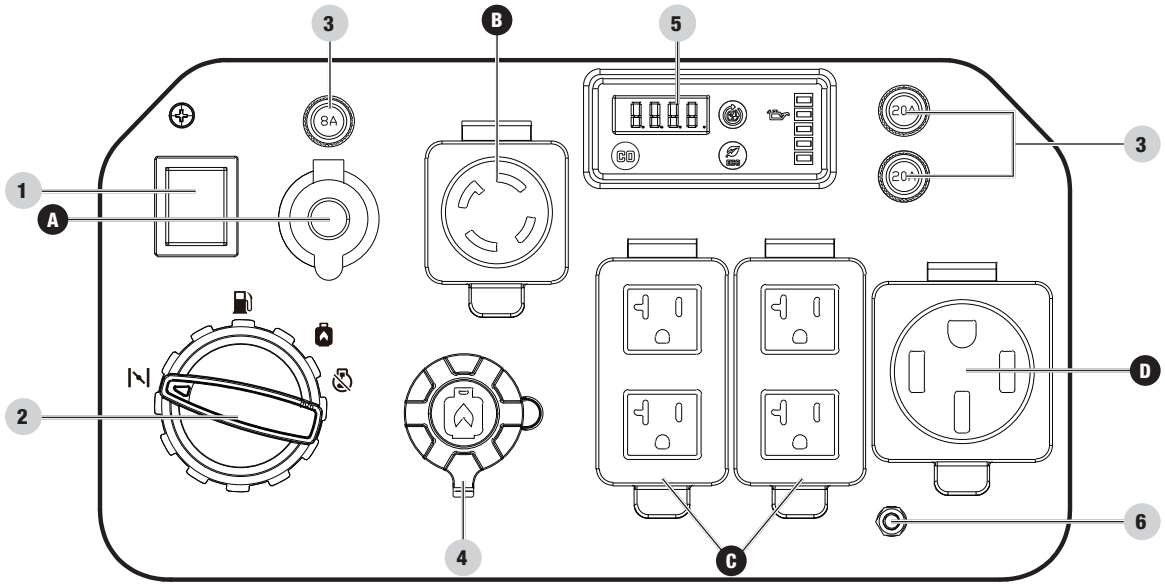

1. **Ignition Switch** – Used to START the generator.
2. **EZ Start Dial** – Used to start, stop and choke the generator.
3. **Circuit Breakers (Push Reset)** – Protects the generator against electrical overloads.
4. **LPG Inlet** – Used to connect LPG fuel source to generator.
5. **Intelligauge** – See *Intelligauge* section.
6. **Ground Terminal** – Consult an electrician for local grounding regulations.

RECEPTACLES		
A	DC	**12V DC, 8A (Regulated Automotive)** May be used to supply electrical power for operation of 12 Volt DC, 8 Amp electrical loads.
B		**120/240V AC, 29.2A Locking (NEMA L14-30R)** May be used to supply electrical power for operation of 120/240 Volt AC, 29.2 Amp, single phase, 60 Hz electrical loads.
C		**(4×) 120V AC, 20A GFCI (NEMA 5-20R)** May be used to supply electrical power for operation of 120 Volt AC, 20 Amp, single phase, 60 Hz electrical loads.
D		**120/240V AC, 29.2A (NEMA 14-50R)** May be used to supply electrical power for operation of 120/240 Volt AC, 29.2 Amp, single phase, 60 Hz electrical loads.

⚠ WARNING

When charging a device, do not place on the exhaust side of the generator. Extreme heat caused by exhaust can damage the device and cause a potential fire hazard. Prolonged exposure to engine exhaust can cause serious injury or death.

EZ Start Dial

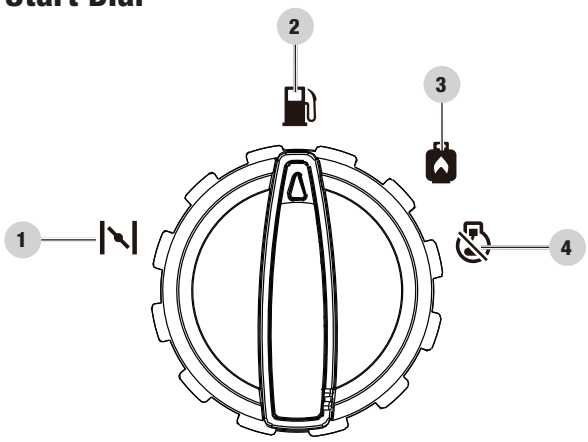

1. **Choke**
2. **Gasoline Operation**
3. **Propane Operation**
4. **Engine Stop**

Intelligauge with Power Meter and CO Shield®

Five mode digital meter for displaying voltage, frequency, session run time, total run time and power output.

A. **CO Shield® LED** – The CO Shield® technology monitors for accumulation of poisonous carbon monoxide (CO) gas produced by engine exhaust when the generator is running. If CO Shield® detects elevated levels of CO gas, it automatically shuts off the engine.

***See CO Shield section for more information*

B. **Economy Mode Button** – Enables/disables automatic idle control.

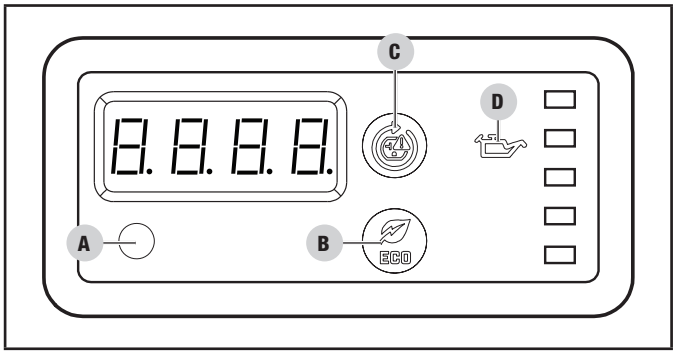

C. **AC Overload Reset Button** – Used to re-energize receptacles after overload fault.

D. **Low Oil Warning Indicator Light** – When ON, engine will shut down and not run. Check oil level.

	MODE	DESCRIPTION	
1	Voltage (V)	Output voltage of the generator.	
		Example: 120 volts	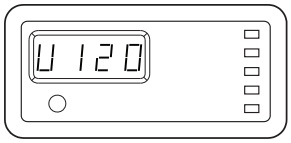
2	Frequency (H)	Output frequency in hertz.	
		Example: 60.0 hertz	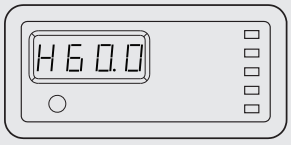
3	Run Time (R)	Run time of the generator for the current session.	
		Example: 6 hours	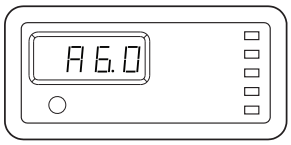
4	Total Run Time	Total run time of the generator since first operation.	
		Example: 16 hours	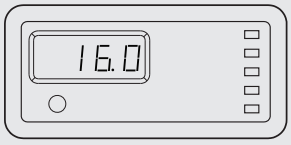
5	Power Meter	Power Output percentage.	
		Example: 100% Output	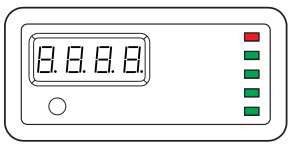

FCC Statement

1. This device complies with Part 15 of the FCC Rules. Operation is subject to the following two conditions:
   1a. This device may not cause harmful interference.
   1b. This device must accept any interference received, including interference that may cause undesired operation.
2. Changes or modifications not expressly approved by the party responsible for compliance could void the user's authority to operate the equipment.

⚠ NOTICE

This equipment has been tested and found to comply with the limits for a Class B digital device, pursuant to Part 15 of the FCC Rules. These limits are designed to provide reasonable protection against harmful interference in a residential installation. This equipment generates, uses and can radiate radio frequency energy and if not installed and used in accordance with the instructions, may cause harmful interference to radio communications. However, there is no guarantee that interference will not occur in a particular installation. If this equipment does cause harmful interference to radio or television reception, which can be determined by turning the equipment off and on, the user is encouraged to try to correct the interference by one or more of the following measures:

- Reorient or relocate the receiving antenna.
- Increase the separation between the equipment and receiver.
- Connect the equipment into an outlet on a circuit different from that to which the receiver is connected.
- Consult dealer or an experienced radio/TV technician for help.

Parts Included

Accessories

Engine Oil	37.2 fl. oz. (1100 ml)
Dual Port USB Adapter (5V/2.4A)	1
Oil Funnel	1
LPG Hose with Regulator	1

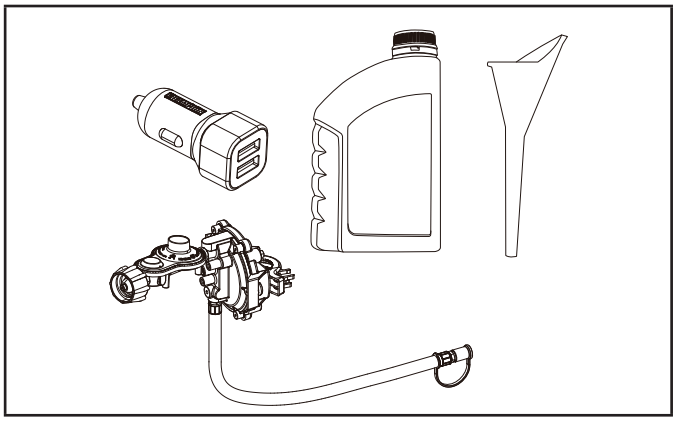

Assembly Parts

Wheels	
9.5 in. (24.1 cm) Never Flat Wheel (A)	2
Wheel hub caps (B)	2
Roll Pin (C)	2
Large R-clip (D)	2
Support Leg	
Support Leg with Vibration Mounts (E)	2
Flange Bolt (M8×16)(F)	4

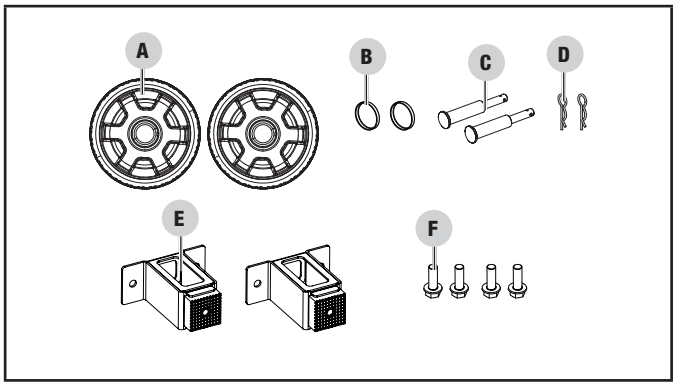

Tools Needed

- Wrench/Socket set (metric)
- Pliers

Tools Included

Spark Plug Socket	1

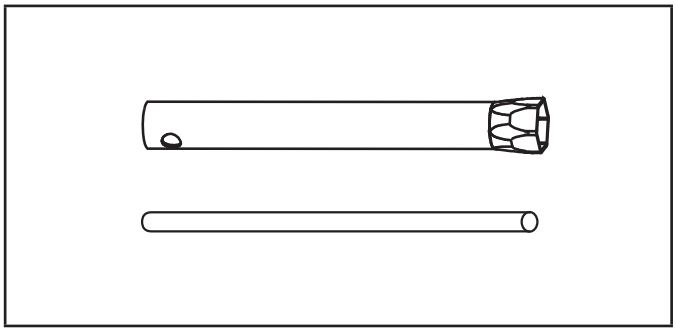

ASSEMBLY

Your generator requires some assembly. This unit ships from our factory without oil. It must be properly serviced with fuel and oil before operation.

If you have any questions regarding the assembly of your generator, call our Technical Support Team at 1-877-338-0999. Please have your serial number and model number available.

Unpacking

1. Set the shipping carton on a solid, flat surface.
2. Remove everything from the carton except the generator.
3. Carefully cut each corner of the box from top to bottom. Fold each side flat on the ground to provide a surface area to work with the generator.

Remove Shipping Support Hardware

To protect the generator during shipping, support hardware has been installed between the engine and frame. This hardware MUST BE REMOVED BEFORE adding oil or gasoline to the generator.

NOTICE

DO NOT attempt to run generator without first removing the shipping support hardware. Damage to the generator as a result of not removing the hardware will void the warranty.

1. **BEFORE** filling the engine with oil or gasoline, tip the generator onto its side as shown. Tip onto the flattened cardboard box the generator came in or other protective surface so as to not scratch the frame.
2. Remove the orange bolts from the bottom panel. Bolts can be discarded.

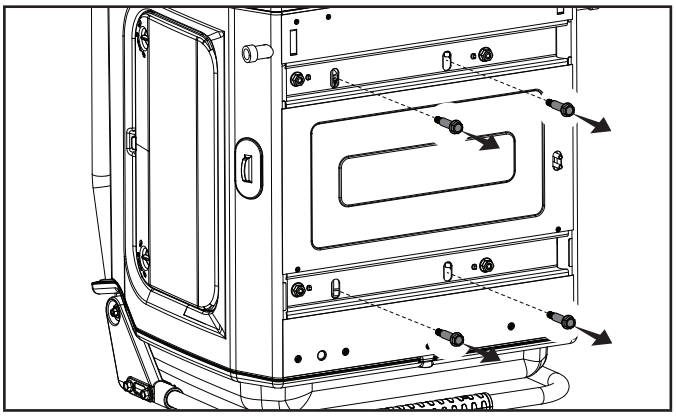

Install the Wheel Kit

CAUTION

The wheel kit is not intended for over-the-road use.

Install the Wheels

1. Before adding fuel and oil, ensure the generator is still on its side from previous step.
2. Slide the roll pin (C) through the wheel (A) from the outside.
3. Slide the roll pin through the mount point on the frame.
4. Insert r-clip (D) into hole at end of roll pin.
5. Re-install hub cap on wheel.

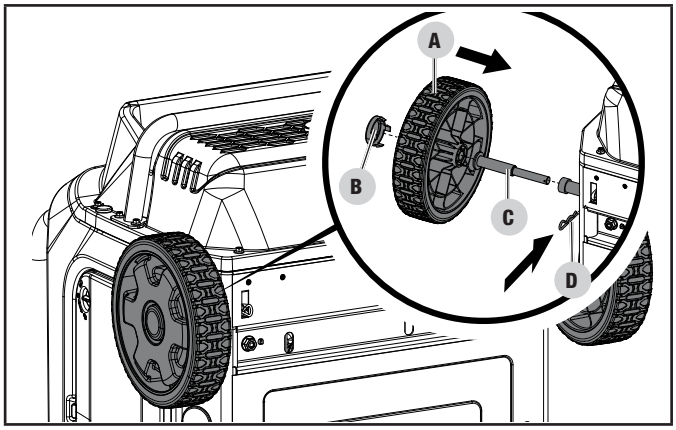

6. Roll the generator onto the other side and repeat above steps to attach the second wheel.

Install the Support Leg

1. Attach the support leg (E) to the generator frame with flange lock bolts (F).

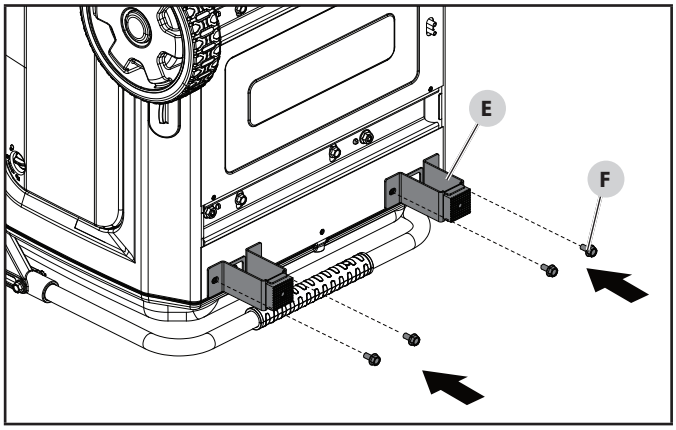

2. Tip the generator upright. Do not leave generator tilted on its side unattended or for an extended period.

Connect the Battery

1. Remove the oil drain side maintenance cover on the right side of the control panel by pushing and turning the two fasteners counterclockwise to the unlocked horizontal position.

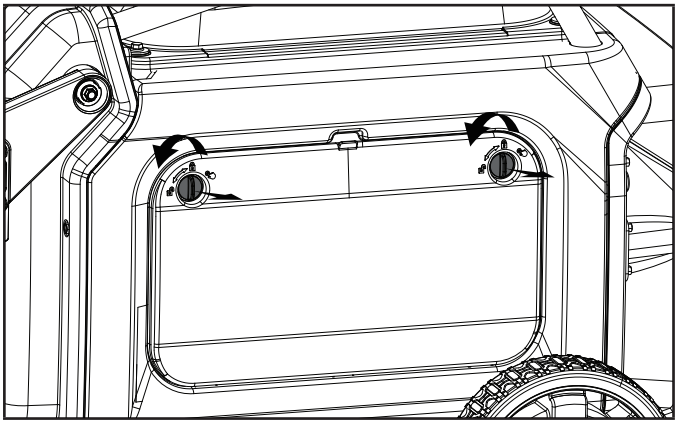

2. Push two halves of battery connector together tightly.

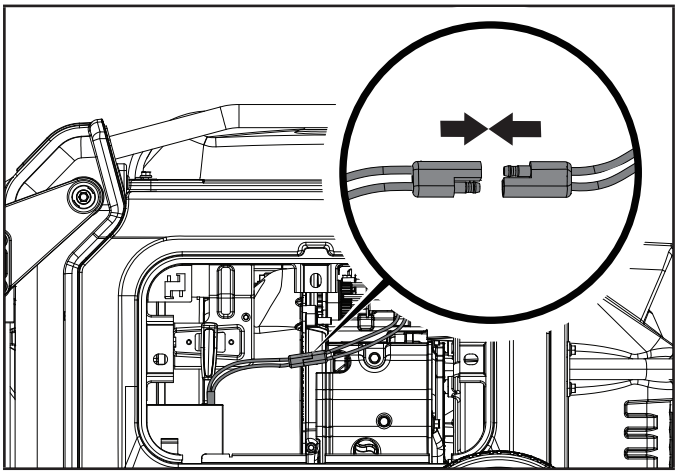

Add Engine Oil

⚠ WARNING

DO NOT attempt to crank or start the engine before it has been properly filled with the recommended type and amount of oil. Damage to the generator as a result of failing to follow these instructions will void your warranty.

NOTICE

The generator rotor has a sealed, pre-lubricated ball bearing that requires no additional lubrication for the life of the bearing.

NOTICE

The recommended oil type for typical use is **10W-30 automotive oil**. However, using the listed conventional oils shown in the "Recommended Engine Oil Type" chart may be used for typical use including the first 5 hours of the break-in run time period of the engine.

If running generator in extreme temperatures, refer to the "Recommended Engine Oil Type" chart.

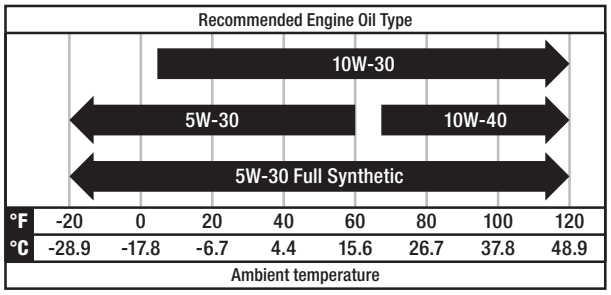

1. Place the generator on a flat, level surface.
2. Remove the oil drain side maintenance cover on the right side of the control panel by pushing and turning the two fasteners counterclockwise to the unlocked horizontal position.

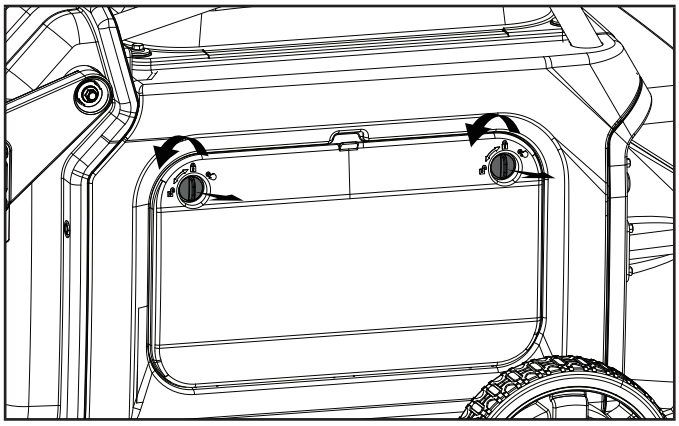

3. Remove oil fill cap/dipstick to add oil.
4. Using a funnel, add up to 37.2 fl. oz. (1100 ml) of oil (included). DO NOT OVERFILL. Replace oil fill cap/dipstick and secure cover.

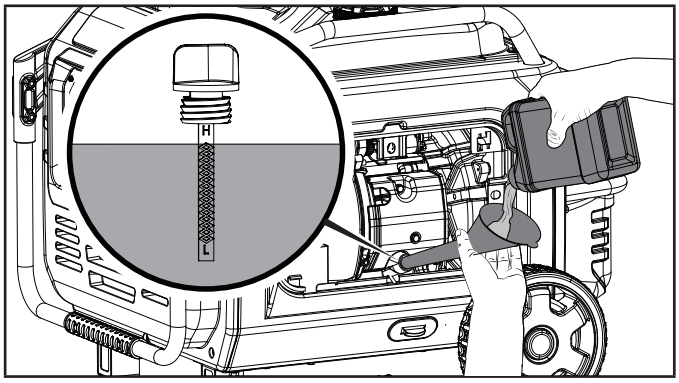

5. Check engine oil level before every use and add as needed.

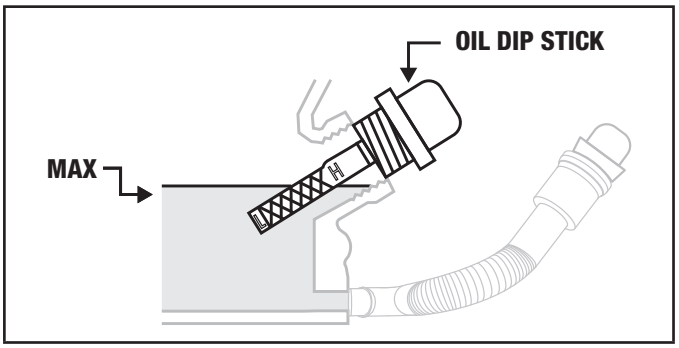

NOTICE

Once oil has been added, a visual check should show oil about 1-2 threads from running out of the fill hole.

When using the dipstick to check oil level, DO NOT screw in the dipstick while checking.

NOTICE

Check oil level often during the break-in period. Refer to the *Maintenance* section for recommended service intervals.

CAUTION

This engine is equipped with a low oil shut-off and will stop when the oil level in the crankcase falls below the threshold level.

NOTICE

The first 5 hours of run time are the break-in period for the unit. During the break in period stay at or below 50% of the running watt rating and vary the load occasionally to allow stator windings to heat and cool. Adjusting the load will also cause engine speed to vary slightly and help seat piston rings. After the 5 hour break-in period, change the oil.

NOTICE

Synthetic oil may be used after the 5 hour initial break-in period. Using synthetic oil does not decrease the recommended oil change interval. Full synthetic 5W-30 oil will aid in starting in cold ambient < 41º F (5º C) temperatures.

Add Fuel: Gasoline

DANGER

Gasoline vapors are highly flammable and extremely explosive.

DO NOT light or smoke cigarettes. Fire or explosion can cause severe burns or death.

Only fill or drain fuel outdoors in a well-ventilated area. DO NOT pump gasoline directly into the generator. Use an approved container to transfer the fuel to the generator.

Never use a gasoline container, gasoline tank, or any other fuel item that is broken, cut, torn or damaged.

DO NOT overfill the gasoline tank. Always keep fuel away from sparks, open flames, pilot lights, heat and other sources of ignition.

Use clean, fresh, regular unleaded gasoline with a minimum octane rating of 87 and an ethanol content of 10% or less by volume. E10 E15 E85

DO NOT mix oil with gasoline.

1. Remove the gasoline cap.
2. Slowly add gasoline to the tank. Tank is full when gasoline reaches red circle on screen. DO NOT OVERFILL. Gasoline can expand after filling. A minimum of ¼ in. (6.4 mm) of space left in the tank is required for gasoline expansion, although more than ¼ in. (6.4 mm) is recommended. Gasoline can be forced out of the tank as a result of expansion if overfilled, and can affect the stable running condition of the generator.

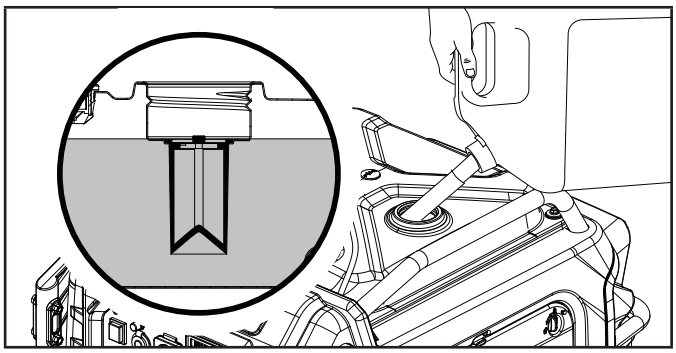

3. The approximate fuel level is shown on the fuel gauge on top of the fuel tank.

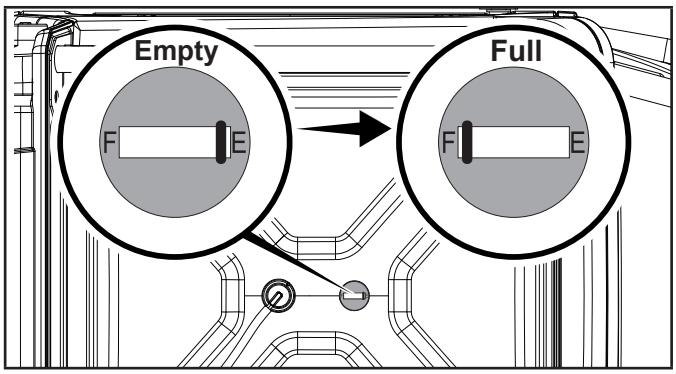

4. Screw on the gasoline cap and wipe away any spilled fuel.

⚠ CAUTION

Use unleaded gasoline with a minimum octane rating of 87 and an ethanol content of 10% or less by volume.

DO NOT light cigarettes or smoke when filling the tank.

DO NOT mix oil and gasoline.

DO NOT overfill the tank. Fill tank to approximately ¼ in. (6.4 mm) below the top of the tank to allow for gasoline expansion.

DO NOT pump gasoline directly into the generator at the pump. Use an approved fuel container to transfer the gasoline to the generator.

DO NOT fill tank indoors.

DO NOT fill tank when the engine is running or hot.

⚠ WARNING

Pouring gasoline too fast through the fuel screen may result in gasoline splashing over the generator and operator while filling.

NOTICE

The generator engine works well with 10% or less ethanol blended gasoline. When using ethanol-gasoline blends there are some issues worth noting:

- Ethanol-gasoline blends can absorb more water than gasoline alone.
- These ethanol blends can eventually separate, leaving water or a watery goo in the tank, fuel valve and carburetor. The compromised gasoline can be drawn into the carburetor and cause damage to the engine and/or create potential hazards.
- If a fuel stabilizer is used, confirm that it is formulated to work with ethanol-gasoline blends.
- Any damages or hazards caused by using ethanol blended gasoline higher than 10% by volume, improperly stored gasoline, and/or improperly formulated stabilizers, are not covered by manufacturer's warranty.

It is advisable to always shut off the gasoline supply and run the engine to starvation after each use. See Storage instructions for extended non-use.

Add Fuel: Propane (LPG)

⚠ DANGER

NEVER place the LPG (liquefied petroleum gas) connector hose OR LPG cylinder tank in the path of the muffler exhaust gas stream of the generator during engine operation.

Connecting an LPG cylinder

1. Confirm the dial is in the OFF position.
2. If using a new propane cylinder, remove the plastic cap from the cylinder valve.
3. Attach the LPG hose assembly (included) to the propane cylinder valve and hand tighten until snug. DO NOT OVER TIGHTEN.
4. Remove the rubber boot covering the propane connection port on the inverter.
5. Align the plastic finger on the male hose fitting on the LPG hose assembly with the slot next to the female quick connect coupling on the inverter.
6. Insert the hose fitting into the quick connect coupling and push in until you hear a "click" and the outside collar of the quick connect coupling moves forward.

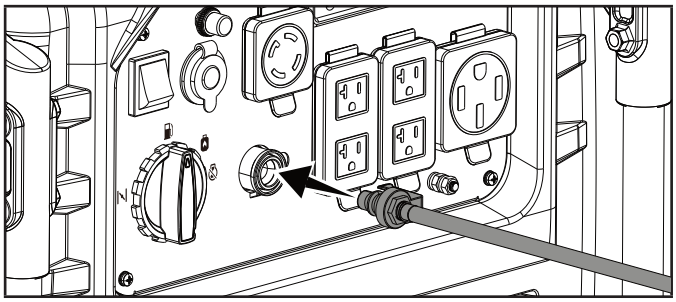

7. Check all connections for leaks by wetting the fittings with a solution of soap and water. Bubbles which appear or bubbles which grow indicate that a leak exists. If a leak exists at a fitting then turn off the valve on the cylinder and tighten the fitting. Turn the valve back on and recheck the fitting with the soap and water solution. If the leak continues or if the leak is not at a fitting then do not use the generator and contact customer service.

NOTICE

- The LPG hose included with this unit works with standard 20, 30, and 40 pound LPG tanks.
- Verify the requalification date on the cylinder has not expired.
- Always position the cylinder so the connection between the cylinder valve and generator inlet won't cause sharp bends or kinks in the LPG hose.

⚠ CAUTION

Do not allow children to tamper or play with the LPG cylinder or hose connections.

⚠ CAUTION

Use approved LPG cylinders equipped with an OPD (overfilling prevention device) valve. Always keep the cylinder in a vertical position with the valve on top and installed at ground level on a flat surface. Cylinders must not be installed near any heat source and should not be exposed to sun, rain, and dust. When transporting and storing, turn off the cylinder valve and generator LPG valve, and disconnect the cylinder. Plug the outlet, usually by a plastic protective cap, if one is available. Keep cylinders away from heat and ventilated when in a vehicle.

⚠ WARNING

If there is a strong smell of LPG: Close valve on the cylinder. Check all connections for leaks by wetting the fittings with a solution of soap and water. Bubbles which appear or bubbles which grow indicate that a leak exists. Do not smoke or light a cigarette, or check for leaks using a match, open flame source or lighter. Contact a qualified technician to inspect and repair an LPG system if a leak is found, before using the generator.

Grounding

Your generator must be properly connected to an appropriate ground to help prevent electric shock.

⚠ WARNING

Failure to properly ground the generator can result in electric shock.

A ground terminal connected to the panel of the generator has been provided (see Controls and Features for terminal location). For remote grounding, connect a length of heavy gauge (12 AWG minimum) copper wire between the generator ground terminal and a copper rod driven into the ground. We strongly recommend that you consult with a qualified electrician to ensure compliance with local electrical codes.

Neutral Floating*

- Neutral circuit **IS NOT** electrically connected to the frame/ground of the generator.
- The generator (stator winding) is isolated from the frame and from the AC receptacle ground pin.
- Electrical devices that require a grounded receptacle pin connection will not function if the receptacle ground pin is not functional.

Neutral Bonded to Frame*

- Neutral circuit **IS** electrically connected to the frame/ground of the generator.
- The generator system ground connects lower frame cross-member below the alternator. The system ground is connected to the AC neutral wire.

**See your Specifications section for specified type of grounding.*

OPERATION

CO Shield® - Carbon Monoxide (CO) Detection and Auto-shutoff System

CO Shield® technology monitors the accumulation of carbon monoxide (CO), a poisonous gas produced by engine exhaust when the generator is running. If CO Shield® detects unsafe elevated levels of CO gas, it automatically shuts off the engine.

CO SHIELD® IS NOT A SUBSTITUTE FOR AN INDOOR CARBON MONOXIDE ALARM OR FOR INDOOR OPERATION.

DO NOT allow engine exhaust fumes to enter a confined area through windows, doors, vents or other openings.

Generators must ALWAYS be used outdoors, far away from occupied buildings with engine exhaust pointed away from people and buildings.

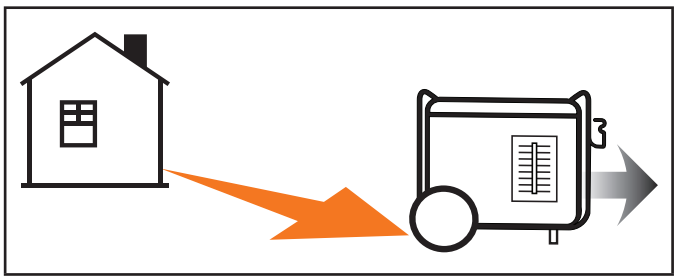

If misused and operated in an unapproved and unsafe location that results in the accumulation of poisonous CO gas inside an enclosed or partially enclosed space, for example a house, garage or a garage with the door partially open, CO Shield® will automatically shut off the generator and then will illuminate a blinking red LED light. **Read the action label for next steps.**

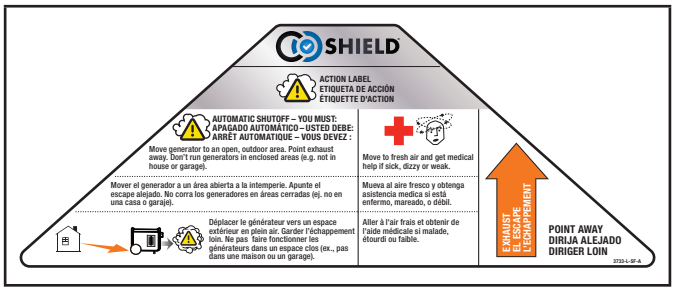

In the event of an engine shut off, when you approach the generator to investigate, a blinking **red** LED light in the CO Shield® area provides notification that the generator shut off due to an accumulating CO hazard. The red LED light will blink for at least five (5) minutes after an engine shut off event.

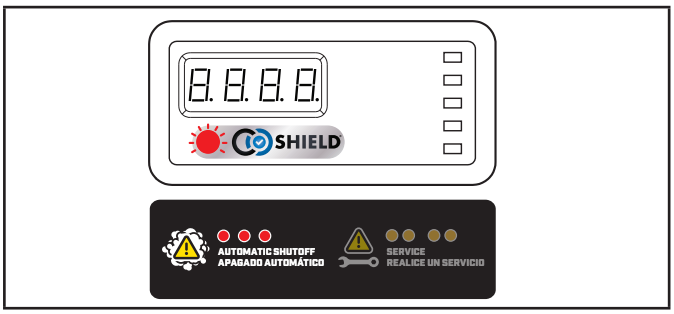

Move the generator far away to an open, outdoor area and point the exhaust away from people and buildings. Once relocated to a safe area, the generator can be restarted, and the proper electrical connections made. Introduce fresh air and ventilate the location where the generator shut off.

When restarting, the red and yellow LED will blink ten (10) times simultaneously to indicate the LED is working.

NOTICE

This blinking LED light does not indicate CO Shield® is working, as CO Shield® is working at all times when the generator is running. Also, the LED light will not blink (10) times if the generator was restarted within 1 minute after it was manually shut off. This does not occur if generator shut off from a high CO event.

If CO Shield® system experiences a fault and no longer provides protection, the generator is shutoff automatically and the **yellow** LED light will blink for at least five (5) minutes to notify you of the fault.

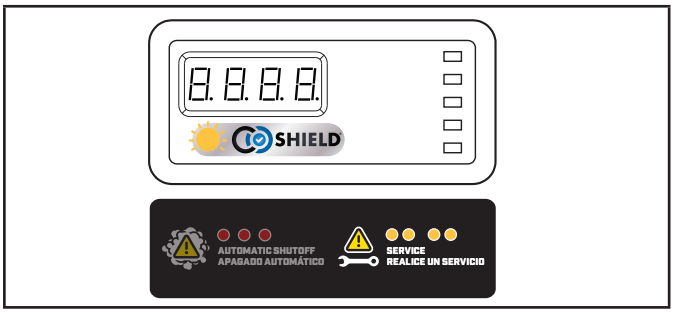

Call our Technical Support Team at 1-877-338-0999 for repair. The generator can be restarted, but will continue to shutoff.

NOTICE

CO Shield® will detect the accumulation of carbon monoxide (CO) from other fuel burning sources such as engine powered equipment, or propane heaters used in the area of operation. If another generator is used and the exhaust stream is pointed at a CO Shield® equipped generator, the CO Shield® may initiate a shutoff due to rising carbon monoxide (CO) levels. This is not a fault. Poisonous carbon monoxide (CO) has been detected. You must take action to move and direct the generator exhaust stream to better disperse carbon monoxide (CO) far away from people or buildings.

DANGER

Tampering with the CO Shield® system will result in a hazardous condition and will void your warranty.

Removing the CO Shield® module will not allow the generator to start.

Generator Location

⚠ WARNING

NEVER operate the generator inside any building, garage, basement, crawlspace, shed, enclosure or compartment, including a generator compartment of a recreational vehicle.

NEVER operate or start the generator in the back of an SUV, camper, trailer, truck bed (regular sides, flat or other configuration), under staircases, stairwells, next to walls or buildings or in any other location that will not allow for adequate cooling of the generator or for the proper exit of the exhaust flow from the muffler system.

DO NOT operate or store the generator in wet weather conditions such as rain or snow. Using a generator in wet conditions could result in serious injury or death due to electrocution.

In some state's generators may be required to be registered with the local utility company when used at construction sites and may be subject to additional rules and regulations, consult your local municipal authority.

Generators should always be operated on a flat, level surface at all times (even when not in operation).

Generators must have a minimum of 5 feet (1.5 m) of clearance from all combustible material.

Generators must also have a minimum of 3 feet (91.4 cm) of air flow clearance on all sides to allow for adequate performance cooling, maintenance and servicing.

Always place the generator in a well-ventilated area. NEVER place the generator near air intake vents or where exhaust fumes could be drawn into occupied or confined spaces.

Always carefully consider wind and air currents when positioning generator.

Always allow generators to properly cool before transport or for storage purposes.

Failure to follow proper safety precautions may result in personal injury, damage to the generator and void the manufacturer's warranty.

⚠ WARNING

During operation the muffler and exhaust fumes will become hot. If adequate cooling and breathing space are not supplied, or if the generator is blocked or enclosed, temperatures can become extremely heated and may lead to fire.

⚠ WARNING

Do not expose to rain or use in damp locations.

Keep all objects a minimum of 5 feet (1.5m) away from the generator at all times. Heat from the muffler surface and exhaust gas stream can ignite combustible materials.

⚠ WARNING

If you must operate in rain or damp locations, DO NOT operate without proper protection of the electrical components.

Use of a safety canopy that is fire retardant and will provide proper air ventilation for the engine exhaust gas stream may be used.

Visit championpowerequipment.com or call to find your Storm Shield cover.

Surge Protection

Electronic devices, including computers and many programmable appliances use components that are designed to operate within a narrow voltage range and may be affected by momentary voltage fluctuations. While there is no way to prevent voltage fluctuations, you can take steps to protect sensitive electronic equipment.

– Install UL1449, CSA-listed, plug-in surge suppressors on the outlets feeding your sensitive equipment.
  Surge suppressors come in single- or multi-outlet styles. They're designed to protect against virtually all short-duration voltage fluctuations.

Starting the Engine: Gasoline

1. Make certain the generator is on a flat, level surface.
2. Disconnect all electrical loads from the generator. Never start or stop the generator with electrical devices plugged in or turned on.

Electric Start

3. Turn the EZ Start dial to the "CHOKE" position.

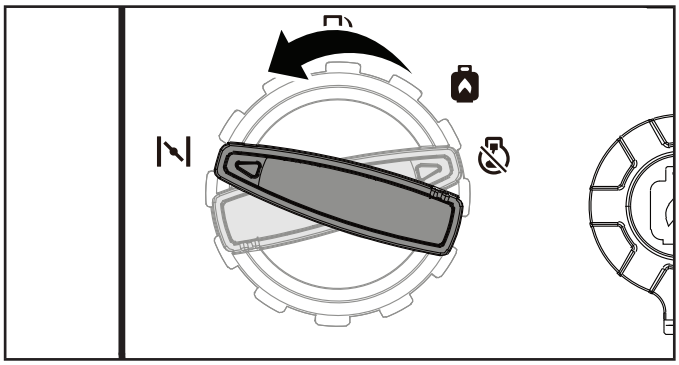

4. Press and hold the ignition switch to start the engine. Release as the engine begins to start. If the engine fails to start within five seconds, release the switch and wait at least ten seconds before attempting to start the engine again.

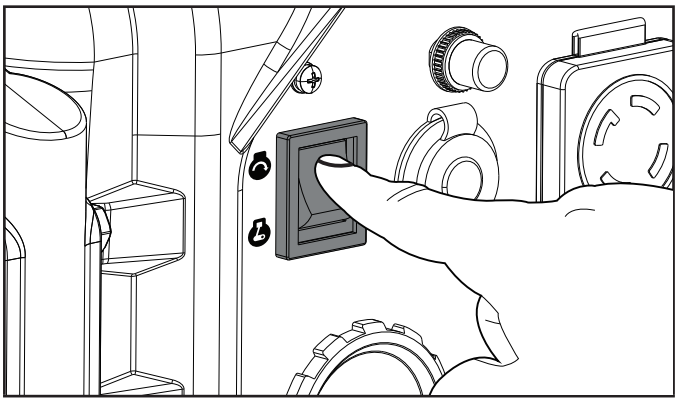

⚠ CAUTION

If the ignition switch is held down in the "START" position longer than 5 seconds it could damage the starter.

NOTICE

If the engine is cranked longer than 5 seconds, the engine can flood and will not start.

5. Do not over-choke. As soon as engine starts, turn the EZ Start dial to the "GASOLINE OPERATION" position.

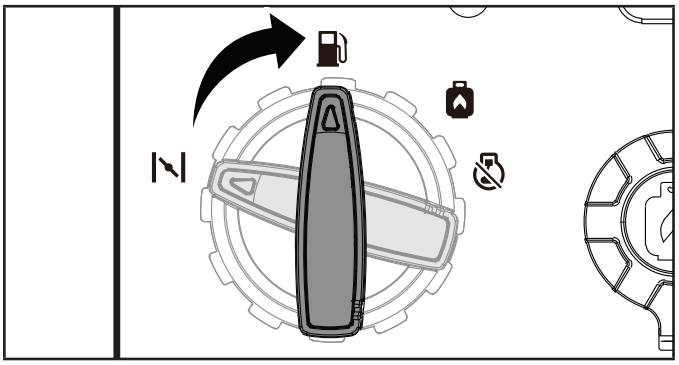

Manual Start

3. Turn the EZ Start dial to the "CHOKE" position.

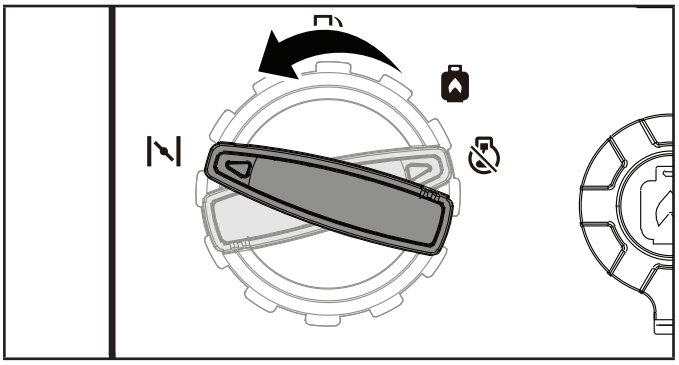

4. Remove the oil drain side maintenance cover on the right side of the control panel by pushing and turning the two fasteners counterclockwise to the unlocked horizontal position.

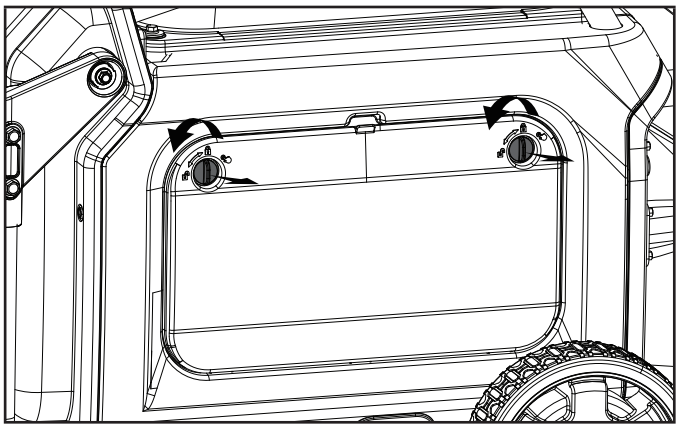

5. Pull the recoil cord slowly until resistance is felt and then pull rapidly.

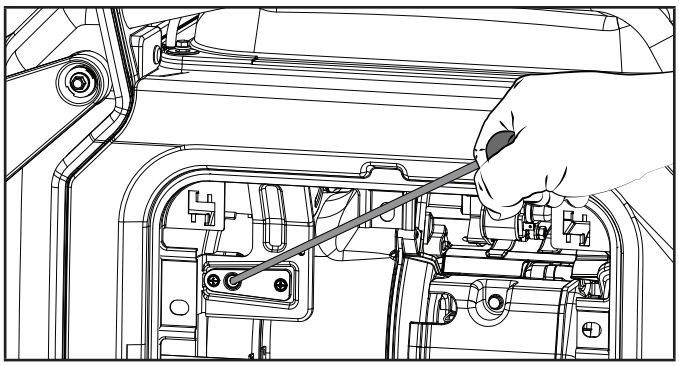

6. Do not over-choke. As soon as engine starts, turn the EZ Start dial to the "GASOLINE OPERATION" position.

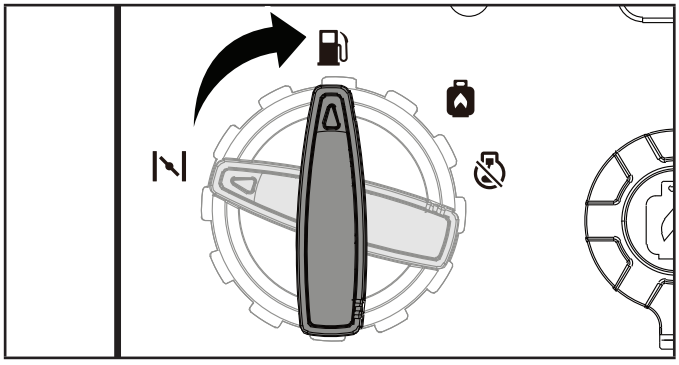

7. Re-install the maintenance cover.

NOTICE

For gasoline restarts with hot engine in hot ambient temperature >86°F (30°C): Rotate the EZ Start dial to the "CHOKE" position for only one pull of the recoil cord. If generator does not start after first pull, rotate the EZ Start dial to the "GASOLINE OPERATION" position for the next three pulls. Too much choke leads to spark plug fouling and engine flooding. This will cause the engine not to start.

NOTICE

For gasoline starting in standard ambient temperature >59°F (15°C): Keep EZ Start dial in "CHOKE" position for three pulls of the recoil cord. If generator does not start after three pulls, rotate the EZ Start dial to the "GASOLINE OPERATION" position for the next three pulls. Too much choke leads to spark plug fouling and engine flooding. This will cause the engine not to start.

NOTICE

For gasoline starting in cold ambient temperature < 59°F (15°C): Keep the EZ Start dial in the "CHOKE" position until engine starts. As soon as the engine starts and runs smoothly turn the EZ Start dial to the "GASOLINE OPERATION" position. In extreme cold temperatures, this may take several seconds.

NOTICE

If the engine starts but does not continue to run make certain that the generator is on a flat, level surface. The engine is equipped with a low oil sensor that will prevent the engine from running when the oil level falls below a critical threshold.

Starting the Engine: Propane (LPG)

NOTICE

Turn the generator off before attempting to switch from gasoline to LPG operation.

1. Make certain the generator is on a flat, level surface.
2. Disconnect all electrical loads from the generator. Never start or stop the generator with electrical devices plugged in or turned on.
3. Open the fuel valve on the propane cylinder.

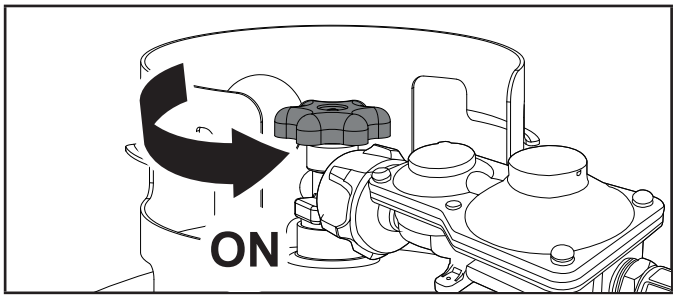

Electric Start

4. Turn the EZ Start dial to the "CHOKE" position.

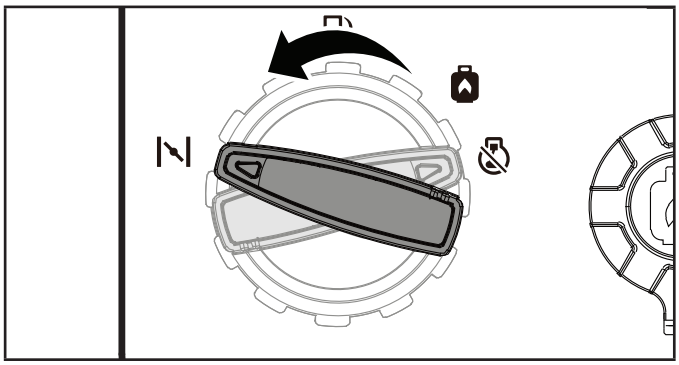

5. Press and hold the ignition switch for 2-3 seconds.

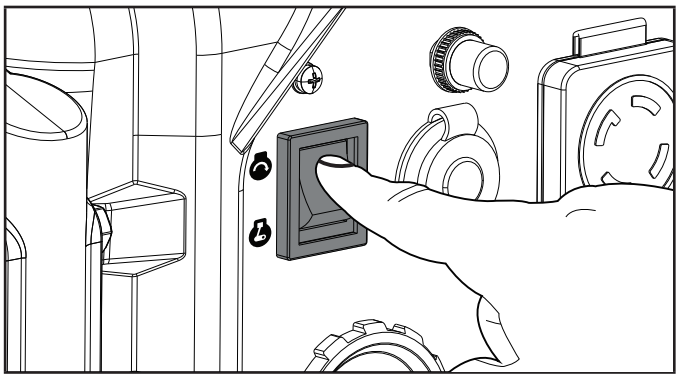

6. Turn the EZ Start dial to the “PROPANE OPERATION” position.

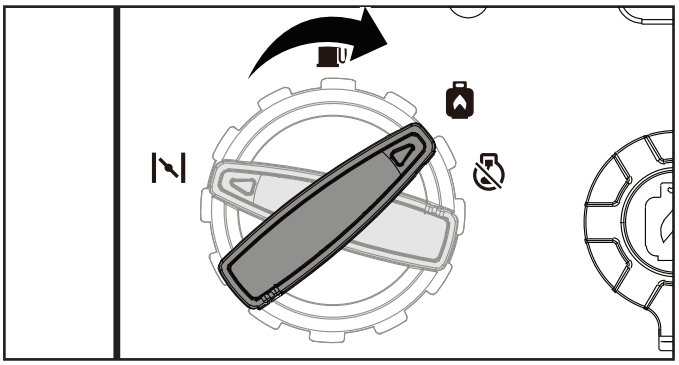

7. Press and hold the ignition switch for up to 5 seconds or until started.

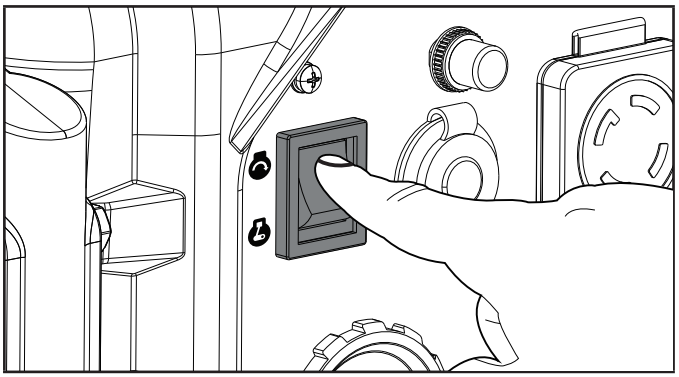

⚠ CAUTION

If the ignition switch is held down in the “START” position longer than 5 seconds it could damage the starter.

NOTICE

If the engine is cranked longer than 5 seconds, the engine can flood and will not start.

8. If engine does not start, wait 10 seconds and repeat step 7.
9. Plug in devices.

Manual Start

4. Turn the EZ Start dial to the “CHOKE” position.

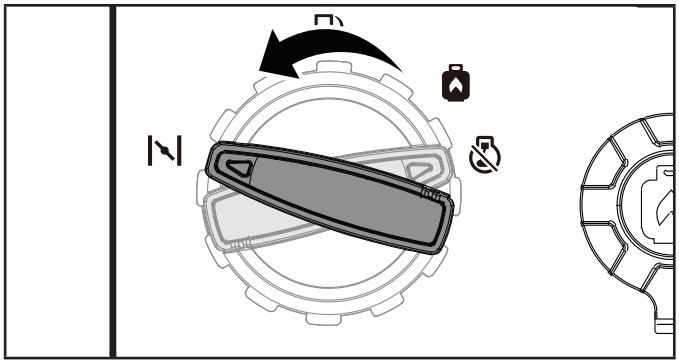

5. Remove the oil drain side maintenance cover on the right side of the control panel by pushing and turning the two fasteners counterclockwise to the unlocked horizontal position.

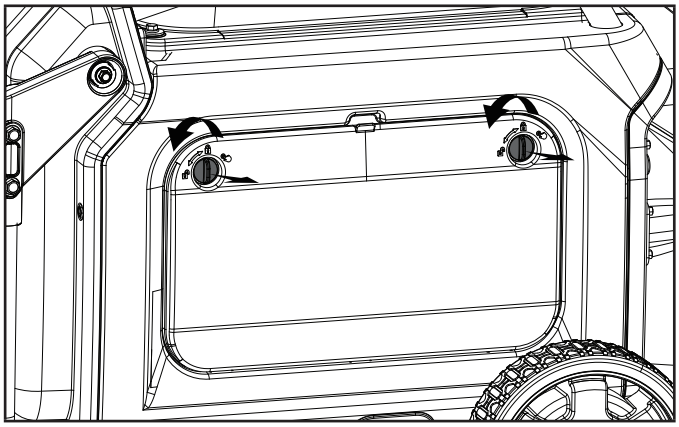

6. Slowly pull the starter cord 2-3 times to prime the engine.

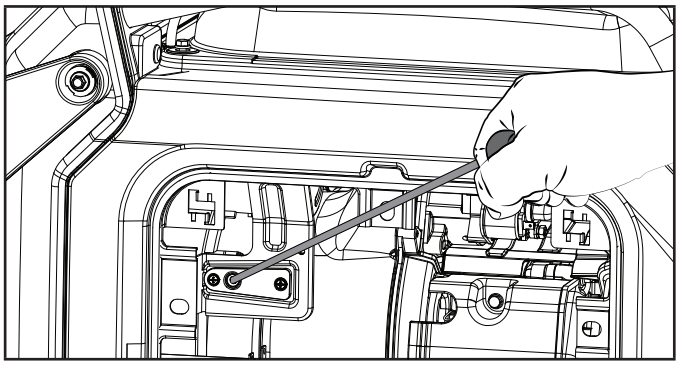

7. Turn the EZ Start dial to the “PROPANE OPERATION” position.

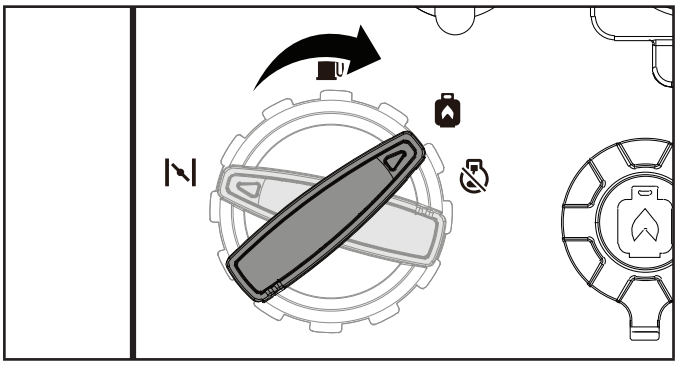

8. Pull the recoil cord slowly until resistance is felt and then pull rapidly.

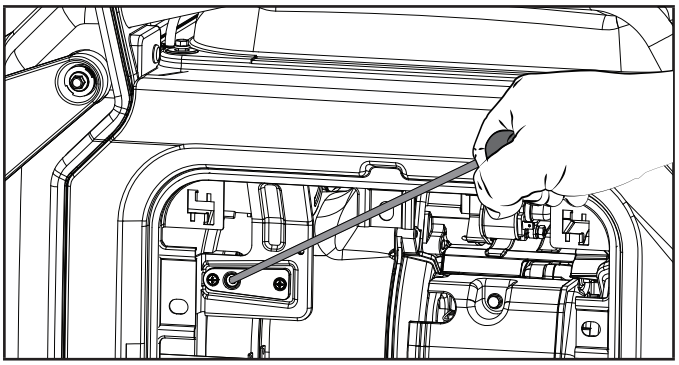

9. Re-install the maintenance cover.

NOTICE

If the engine starts but does not continue to run, make certain that the generator is on a flat, level surface. The engine is equipped with a low oil sensor that will prevent the engine from running when the oil level falls below a critical threshold.

NOTICE

Accumulation of frost on LPG cylinder and regulators is common during operation and normally is not an indication of a problem. As LPG vaporizes and travels from the cylinder to the generator engine it expands. The amount of frost that forms can be affected by the size of the cylinder, the amount of LPG being used, the humidity of the air and other operating conditions.

In unusual situations this frost may eventually restrict the flow of LPG to the generator resulting in deteriorating performance. For example, if the cylinder temperature is reduced to a very low level then the rate at which the LPG vaporizes is also reduced and may not provide sufficient flow to the engine. This is not an indication of a problem with the generator but only a problem with the flow of LPG from the cylinder. If generator performance seems to be deteriorating at the same time that ice formation is observed on tank valve, hose or regulator then some actions may be taken to eliminate this symptom.

In these rare situations it can be helpful to reduce or eliminate the cold fuel system effects by doing one of the following:

– Exchanging fuel cylinders to allow the first cylinder to warm up, repeating as necessary.
– Placing the cylinder at the end of the generator near the handle, where engine fan air flows out from the generator. This air is slightly heated by flowing over the engine. The cylinder should not be placed in the path of the muffler outlet.
– The cylinder can be temporarily warmed by pouring warm water over the top of the cylinder.

Battery

NOTICE

The supplied 12V battery will re-charge while the engine is running. When the generator is not in use for extended periods of time, it is recommended that the battery be fully charged at least once per month with a trickle charger and disconnected when fully charged or charged using a battery maintainer for long term storage (not included).

Connecting Electrical Loads

Let the engine stabilize and warm up for a few minutes after starting.

Plug in and turn on the desired 120 or 240 (if applicable) Volt AC single phase, 60 Hz electrical loads.

– DO NOT connect 3-phase loads to the generator.

– DO NOT overload the generator.

– Use only a high quality, insulated, compatible (3-wire or 4-wire) grounded cord set rated equal to or greater (volts and amps) than the receptacle plugging into.

⚠ WARNING

Always remember to plug your appliances directly into the generator and do not plug the generator power cord into any electrical outlet or connect to the circuit breaker panel in your home. Connecting a generator to your home's electric utility company's power lines, or to another power source, called 'backfeeding' is a dangerous practice that is illegal in many states and municipalities.

This action if done incorrectly could damage your generator, appliances and could cause serious injury or death to you or a utility worker when attempting to restore power during an outage occurrence in the neighborhood who may then unexpectedly encounter high voltage on the utility line and suffer a fatal shock.

Whether injuries occur or not, if installed incorrectly and not to applicable laws and codes, you may be subject to fines or the utility company may disconnect your home power should this practice be found in your home.

If the generator will be connected to a building electrical system, those connections must isolate the generator power from the utility power. You are responsible for ensuring your generator's electricity does not backfeed into the electric utility power lines. These connections must comply with all applicable laws and codes – Consult your local utility company or a qualified electrician to properly install this connection.

Do Not Overload Generator

Capacity

Follow these simple steps to calculate the running and starting watts necessary for your purposes:

1. Select the electrical devices you plan on running at the same time.
2. Total the running watts of these items. This is the amount of power you need to keep your items running.
3. Identify the highest starting wattage of all devices identified in step 1. Add this number to the number calculated in step 2. Starting wattage is the surge of power needed to start some electric driven equipment. Following the steps listed under "Power Management" will guarantee that only one device will be starting at a time.
4. If the generator power output is cut off due to an overload condition indicated by the AC overload blinking light, lower the load by unplugging one or more items, then press the AC overload reset button before restarting the generator for continued normal operation.

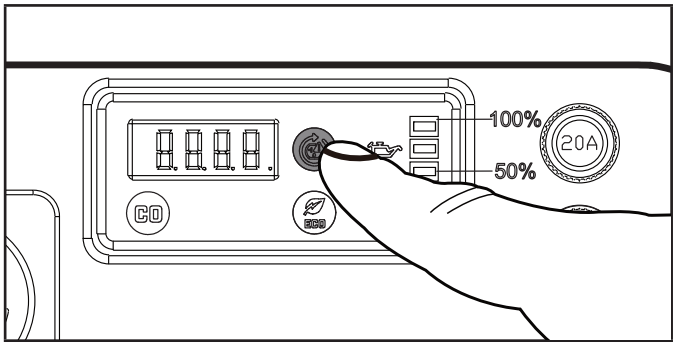

Power Management

Use the following formula to convert voltage and amperage to watts:

Volts × Amps = Watts

To prolong the life of your generator and attached devices, follow these steps to add electrical load:

1. Start the generator with no electrical load attached.
2. Allow the engine to run for several minutes to get up to temperature.
3. Make sure all circuit breakers are set to the run position.
4. Plug in and turn on the first item. It is best to attach the item with the largest load first.
5. Allow the engine to stabilize.
6. Plug in and turn on the next item.
7. Allow the engine to stabilize.
8. Repeat steps 5-6 for each additional item.

NOTICE

Never exceed the specified capacity when adding loads to the generator.

GFCI

Your generator is equipped with ground fault circuit interrupter (GFCI) receptacles. In the event of a ground fault, a GFCI trips automatically to stop the flow of electricity and prevent serious injury. The green indicator light (A) on the receptacle will also turn off. Press the “RESET” (B) button located on the front of the receptacle to restore flow of electricity. The indicator light will also turn back on. GFCI does not protect against circuit overloads.

To ensure proper operation of the GFCI duplex, perform this test monthly:

1. With the generator running, plug a lamp into the GFCI receptacle. Turn the lamp on.
2. Press the “TEST” (C) button located on the front of the receptacle to trip the device. This should immediately stop the flow of electricity and shut off the lamp. If the electricity is not stopped, do not use this receptacle until it has been serviced or replaced.
3. Press the “RESET” button located on the front of the receptacle to restore the flow of electricity. If the indicator light does not come back on or if the GFCI cannot be reset then it must be replaced.

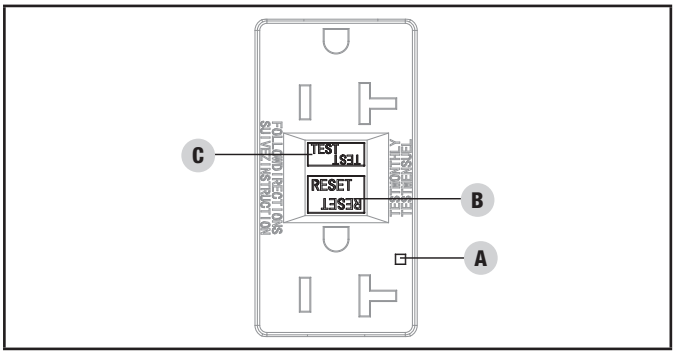

NOTICE

In any electrical application, some current will flow through the protective ground conductor to the ground, this is called leakage current. It takes 4 mA (0.004 A) and higher of leakage current from the hot wire to the ground to cause a GFCI to trip. On circuits protected by GFCI’s, leakage current can cause unnecessary and intermittent tripping.

Some stationary motors, such as a bathroom vent fan, fluorescent lighting fixtures or some refrigerators, may produce enough leakage to cause nuisance tripping. To avoid nuisance tripping, a GFCI should not supply:

– Fluorescent or other types of electric-discharge lighting fixtures.
– Permanently installed electric motors, like air conditioners, furnaces or refrigerators.

Eco (Economy) Mode

The Eco Mode button can be activated to turn on economy control in order to minimize fuel consumption and noise while operating the unit during times of reduced electrical output. Eco Mode allows the engine speed to idle during periods of non-use.

The engine speed returns to normal when an electrical load is connected. When the economy switch is off, the engine runs at normal speed continuously.

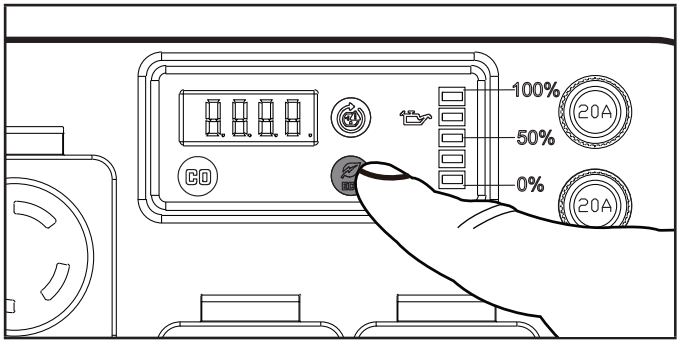

CAUTION

For periods of high electrical load or momentary fluctuations, the Eco Mode should be off.

12V DC Regulated Automotive Style Outlet

The 12V DC outlet(s) can be used with supplied accessories and other commercially available 12V DC automotive style plugs. Confirm the input voltage range of your item is at least 12-24V DC.

WARNING

Do not operate a device while it is plugged into the 12V DC outlet. When charging a device, do not place on the exhaust side of the generator. Extreme heat caused by exhaust can damage the device and cause a potential fire hazard. Prolonged exposure to engine exhaust can cause serious injury or death.

Battery Charging

1. Before connecting the battery charging cable (not included) to a battery that is installed in a vehicle, disconnect the vehicle battery ground cable from the negative (–) battery terminal.
2. Plug the battery charging cable into the 12V DC receptacle of the generator.
3. Connect the red (+) battery charger lead to the red (+) battery terminal.
4. Connect the black (–) battery charger lead to the black (–) battery terminal.
5. Start the generator.

Important: The 12V DC outlet is ONLY to be used with supplied accessories and other commercially available 12V DC automotive style plugs. Be sure all electric devices including the lines and plug connections are in good condition before connection to the generator.

⚠ WARNING

Do not start the vehicle while the battery charging cable is connected and the generator is running. It will not give the battery a boost of power. The vehicle or the generator may be damaged. Charge only vented wet lead acid batteries. Other types of batteries may burst, causing personal injury or damage.

NOTICE

Be sure all electric devices including the lines and plug connections are in good condition before connection to the generator.

Stopping the Engine

Gasoline

1. Turn off and unplug all electrical loads. Never start or stop the generator with electrical devices plugged in or turned on.
2. Let the generator run at no-load for several minutes to stabilize internal temperatures of the engine and generator.
3. Turn the EZ Start dial to the “ENGINE STOP” position

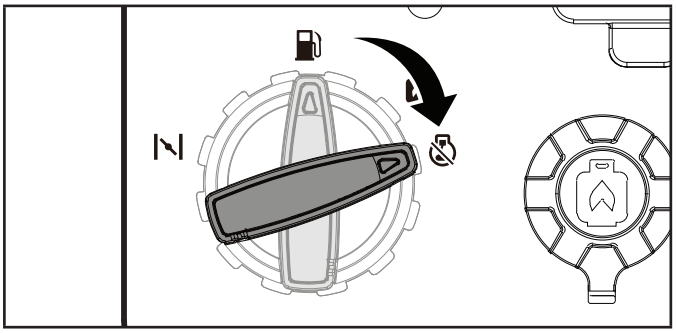

Propane

1. Turn off and unplug all electrical loads. Never start or stop the generator with electrical devices plugged in or turned on.
2. Let the generator run at no-load for several minutes to stabilize internal temperatures of the engine and generator.
3. Close the fuel valve on the propane cylinder.

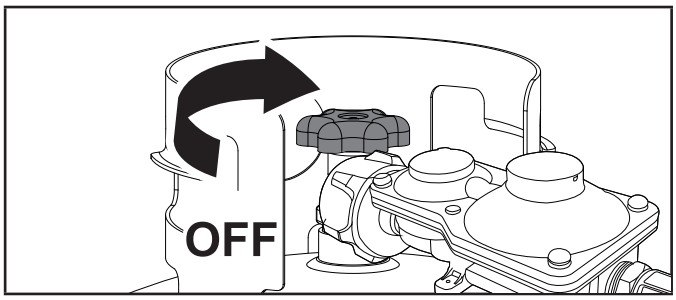

4. Turn the EZ Start dial to the “ENGINE STOP” position.

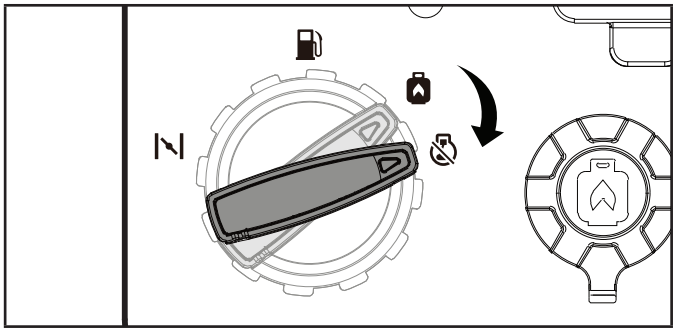

Important: Always ensure that the EZ Start is in the “ENGINE STOP” position when the generator is not in use.

NOTICE

If the generator will not be used for a period of two (2) weeks or longer, please see the Storage section for proper engine and fuel storage.

Moving the Generator

⚠ CAUTION

- NEVER lift or carry the generator using the folding handle.
- NEVER tilt sideways while moving the generator.
- ALWAYS place the generator on its wheels in the upright position.
- ALWAYS turn the generator off and ensure the fuel valve is closed.
- ALWAYS make sure engine and muffler are cooled down before the generator can be handled safely (typically 15-30 minutes).

⚠ WARNING

The folding handle is not long enough to hold and walk with a full stride when moving the generator. Always side step as you walk to avoid injury to your heels and/or feet. Failure to follow these instructions could result in personal injury or damage to the generator.

1. Begin by raising the folding handle, found on opposite side of wheels.
2. Using the handle, tilt the end of the generator slightly off the ground until balanced on the wheels.
3. While maintaining balance, roll the generator to the desired location.

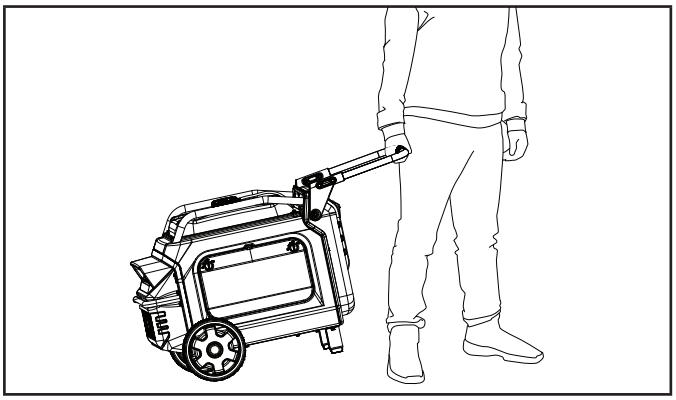

Operation at High Altitude

The density of air at high altitudes is lower than at sea level. Engine power is reduced as the air mass and air-fuel ratio decrease. Engine power and generator output will be reduced approximately 3½% for every 1000 ft. of elevation above sea level. At high altitudes increased exhaust emissions can also result due to the increased enrichment of the air fuel ratio. Other high altitude issues can include hard starting, increased fuel consumption and spark plug fouling.

To alleviate high altitude issues other than the natural power loss, CPE can provide a high altitude carburetor main jet. The alternative main jet and installation instructions can be obtained by contacting our Technical Support Team. Installation instructions are also available in the Technical Bulletin area of the CPE website.

The part number and recommended altitude range for the application of the high altitude carburetor main jet is listed in the following table.

In order to select the correct high altitude main jet it is necessary to identify the carburetor model. For this purpose, a code is stamped on the side of the carburetor. Select the correct high altitude jet part number corresponding to the carburetor code found on your particular carburetor.

Carb. Code	High Alt. Jet Part Number	Altitude Range
16100-000068	16161-000078	3000ft. (914m)
	16161-000045	6000ft. (1829 m)

⚠ WARNING

Operation using the alternative main jet at elevations lower than the recommended minimum altitude can damage the engine. For operation at lower elevations, the originally supplied standard main jet must be used. Operating the engine with the wrong engine configuration at a given altitude may increase its emissions and decrease fuel efficiency and performance.

MAINTENANCE

Make certain that the generator is kept clean and stored properly. Only operate the unit on a flat, level surface in a clean, dry operating environment. DO NOT expose the unit to extreme conditions, excessive dust, dirt, moisture or corrosive vapors.

⚠ WARNING

Never operate a damaged or defective generator.

⚠ WARNING

Improper maintenance will void your warranty.

NOTICE

For Emission control devices and systems, read and understand your responsibilities for service as stated in the Emission Control Warranty Statement of this manual.

The owner/operator is responsible for all periodic maintenance.

Complete all scheduled maintenance in a timely manner.

Correct any issue before operating the generator.

For service or parts assistance, contact our Technical Support Team at 1-877-338-0999.

Cleaning the Generator

⚠ CAUTION

DO NOT spray generator directly with water.

Water can enter the generator through the cooling slots and damage the generator windings. It can also contaminate the fuel system.

1. Use a damp cloth to clean exterior surfaces of the generator.
2. Use a soft bristle brush to remove dirt and oil.
3. Use an air compressor (25 PSI) to clear dirt and debris from the generator.
4. Inspect all air vents and cooling slots to ensure that they are clean and unobstructed.

To prevent accidental starting, remove and ground the spark plug wire before performing any service.

Changing the Engine Oil

Change oil when the engine is warm. Refer to the oil specification to select the proper grade for your operating environment.

1. Place the generator on a flat level surface.
2. Remove the oil drain side maintenance cover on the right side of the control panel by pushing and turning the two fasteners counterclockwise to the unlocked horizontal position.

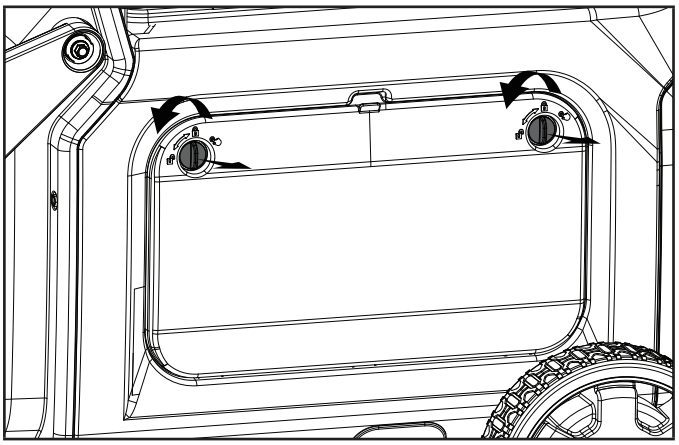

3. Remove the oil drain hose slot plug and pull the drain hose through the slot.

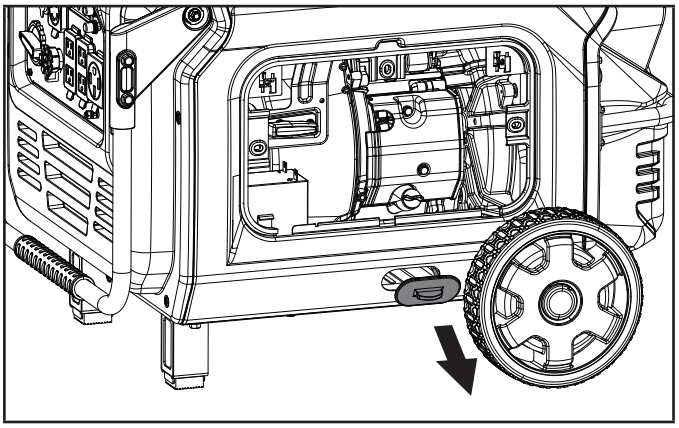

4. Remove the oil drain plug by turning it counter clockwise.

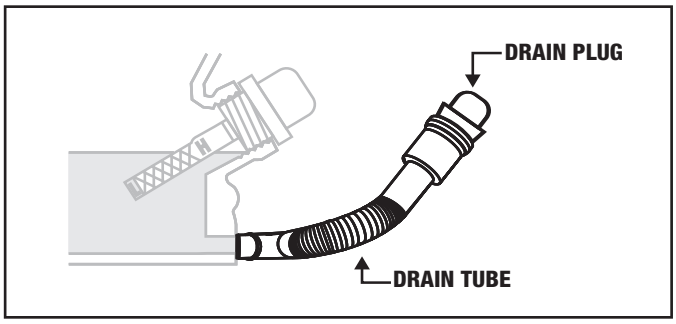

5. Ensure the oil drain hose is lower than the engine and allow the oil to drain completely into an appropriate container.

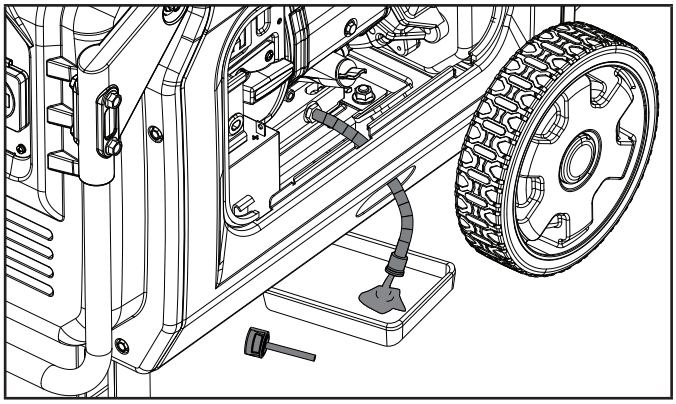

6. Replace the oil drain plug.
7. Add oil according to *Add Engine Oil* in *Assembly* section. DO NOT OVERFILL. Oil not included for routine maintenance.
8. Reinstall the maintenance cover.
9. Dispose of used oil at an approved waste management facility.

NOTICE

Once oil has been added, a visual check should show oil about 1-2 threads from running out of the fill hole. If using the dipstick to check oil level, DO NOT screw in the dipstick while checking.

Cleaning and Adjusting the Spark Plug

1. Remove the maintenance cover on the left side of the control panel by pushing and turning the two fasteners counterclockwise to the unlocked horizontal position.

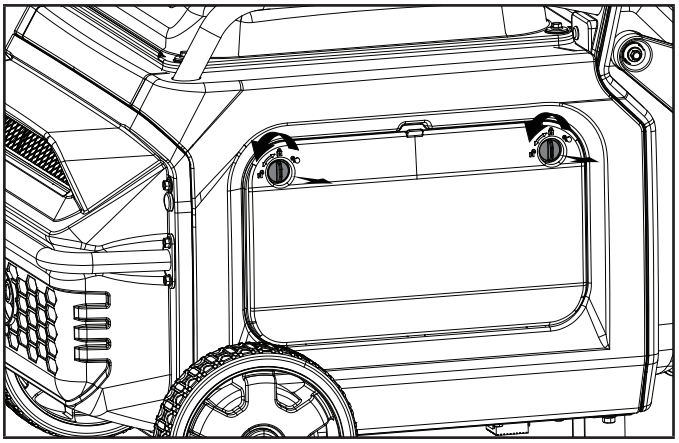

2. Remove the spark plug cable from the spark plug.

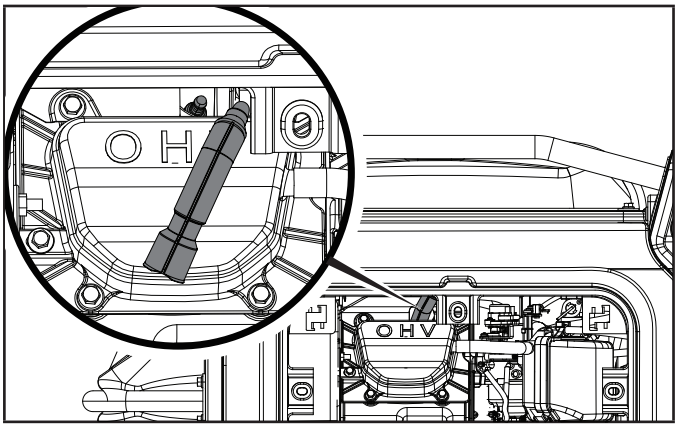

3. Use a spark plug socket tool (included), or a 13/16 in. (21 mm) socket (not included) to remove the plug.
4. Inspect the electrode on the plug. It must be clean and not worn to produce the spark required for ignition.
5. Make certain the spark plug gap is 0.0276-0.0315 in. (0.7-0.8 mm).

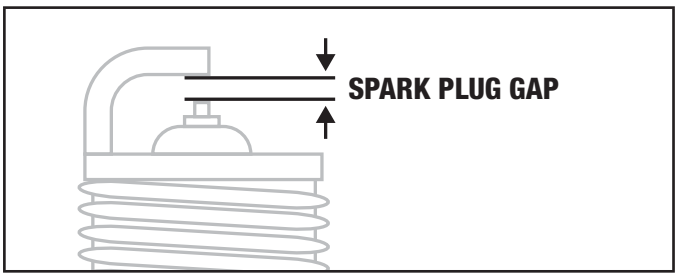

6. Refer to the spark plug types in *Specifications* when replacing the plug.
7. Firmly re-install the plug.
8. Attach the spark plug cable to the spark plug.
9. Reinstall the maintenance cover.

Cleaning the Air Filter

1. Remove the maintenance cover on the left side of the control panel by pushing and turning the two fasteners counterclockwise to the unlocked horizontal position.

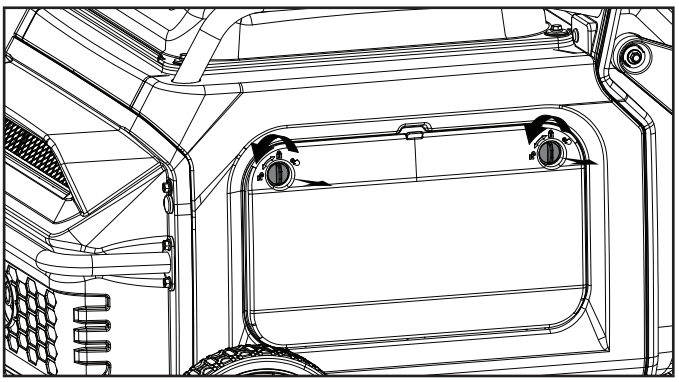

2. Locate the air filter plastic cover and remove by pinching the clips together and pulling the cover off.

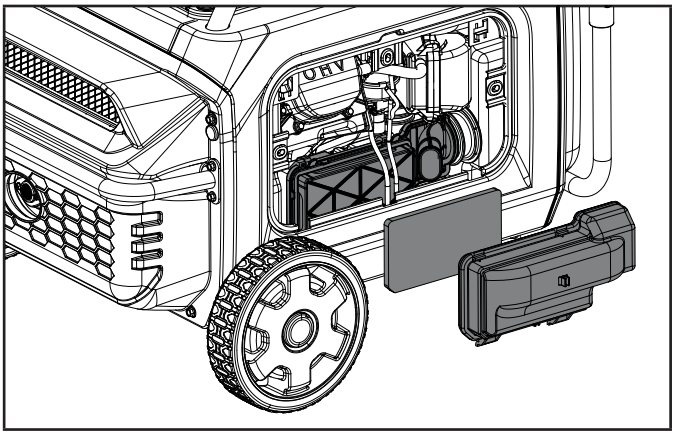

3. Remove the foam element.
4. Wash in liquid detergent and water. Squeeze thoroughly dry in a clean cloth.
5. Saturate in clean engine oil.
6. Squeeze in a clean, absorbent cloth to remove all excess oil.
7. Place the filter in the assembly.
8. Reattach the air filter cover and snap in place.
9. Re-install the maintenance cover.

Cleaning the Spark Arrestor

1. Allow the engine to cool completely before servicing the spark arrestor.
2. Remove the two screws holding the cover plate which retains the spark arrestor to the muffler.
3. Remove the spark arrestor screen.
4. Carefully remove the carbon deposits from the spark arrestor screen with a wire brush.

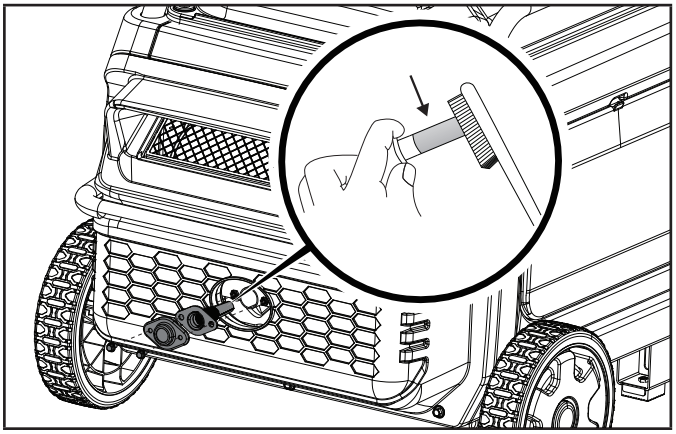

5. Replace the spark arrestor if it is damaged.
6. Position the spark arrestor on the muffler and attach with the screws removed in step 2.

⚠ CAUTION

Failure to clean the spark arrestor will result in poor engine performance.

NOTICE

Federal and local laws and administrative requirements indicate when and where spark arrestors are required. When ordered, spark arrestors are required for operation of this generator in National Forest lands. In California, this generator must not be used on any forest-covered land, brush-covered land, or grass-covered land unless the engine is equipped with a spark arrestor.

Adjusting the Governor

⚠ WARNING

Tampering with the factory set governor will void your warranty.

The air-fuel mixture is not adjustable. Tampering with the governor can damage your generator and your electrical devices and will void your warranty. Contact our Technical Support Team at 1-877-338-0999 for all other service and/or adjustment needs.

Generator Battery

Your generator is equipped with an automatic battery charging circuit that charges the battery while the engine is running. The battery will maintain a proper charge if the unit is used at least once every 180 days for 2 hours with ECO mode off. If it is used less frequently, the battery should be connected to a trickle charger or battery maintainer (not included) to keep the battery properly charged.

Maximum charging rate should not exceed 1.6 amps. Follow the instructions included with the battery charger. The battery should be fully charged at least twice per year. If the battery is not able to start the engine, it can be started by manually pulling the engine recoil cord. If the battery voltage is extremely low, the charging circuit may not be able to re-charge the battery. In this case, the battery must be connected to a standard automotive style battery charger for re-charging before it can be used.

Disconnect the Battery

1. Pull two halves of battery connector apart.

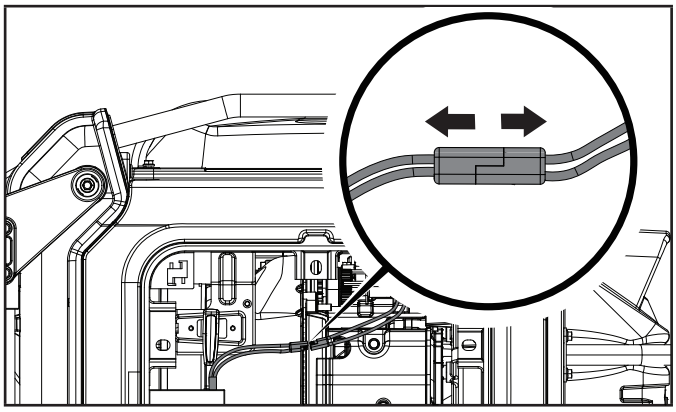

Charge the Battery

For a generator equipped with batteries for electric starting, proper battery maintenance and storage should be followed. A trickle charger or battery maintainer should be used to charge the battery while the generator is in storage. Maximum charging rate should not exceed 1.6 amps. Follow the instructions included with the trickle charger or battery maintainer. The battery should be fully charged at least once per month.

1. Remove the battery from the generator.
2. Charge battery following the battery charger's instructions.
3. After charging, leave the battery for 0.5 to 1 hour before checking the voltage. If the voltage is less than 12.8 volts, additional charging is necessary.

⚠ WARNING

Electrolyte inside the battery is harmful to skin and eyes. Electrolyte may pose an increased risk of harm if not handled properly.

If the battery leaks and electrolyte gets in your eyes, do not rub them. Instead, rinse them with clean running water and immediately seek medical attention. If left untreated, electrolyte can cause permanent eye injury. Keep away from children.

NOTICE

- Do not charge the battery with charging voltage over 15.0V and charging current over 1.6A.
- Do not charge the battery below 32°F (0°C) or above 113°F (45°C).
- If the battery becomes hot to the touch, stop charging. Allow battery to cool before resuming.

Maintenance Schedule

Follow the service intervals indicated in the following maintenance schedule.

Service your generator more frequently when operating in adverse conditions.

Contact our Technical Support Team at 1-877-338-0999 to locate the nearest CPE certified service dealer for your generator or engine maintenance needs.

EVERY 8 HOURS OR PRIOR TO EACH USE

- ☐ Check oil level
- ☐ Clean around air intake and muffler

FIRST 5 HOURS (BREAK IN)

- ☐ Change oil

EVERY 50 HOURS OR ANNUALLY

- ☐ Clean air filter
- ☐ Change oil if operating under heavy load or in hot environments

EVERY 100 HOURS OR ANNUALLY

- ☐ Change oil
- ☐ Clean/adjust spark plug
- ☐ Clean spark arrestor
- ☐ Clean fuel valve filter*

EVERY 250 HOURS

- ☐ Clean combustion chamber*
- ☐ Check/adjust valve clearance*

EVERY 3 YEARS

- ☐ Replace fuel line*

** To be performed by knowledgeable, experienced owners or CPE certified service centers.*

STORAGE

⚠ WARNING

To avoid accidental or unintended ignition of your generator during periods of storage, the following precautions should be followed:

- When storing the generator make sure the EZ Start dial is set to the "ENGINE STOP" position.

NOTICE

The following storage instructions apply when gasoline has been used to run the generator.

NOTE: LPG does not apply and will not create build up or clog the carburetor.

Short Term Storage (up to 30 days)

Ethanol blended gasoline in the gasoline tank has a maximum shelf life of up to 1 year with the addition of properly formulated fuel stabilizers and if stored in a cool, dry place. Gasoline in the carburetor, however, may gum up and clog the carburetor if it isn't used or drained within 2-4 weeks.

If using the generator within 2 weeks, follow the steps according to *Stopping the Engine* section.

1. If not using the generator for 2-4 weeks, begin by making sure all appliances are disconnected from the generator.
2. Start the generator as instructed in *Starting the Engine* section.
3. Let the engine run on gasoline until fuel starvation has stopped the engine. Let the engine run on gasoline until fuel starvation has stopped the engine.
4. After the engine stops, turn the EZ Start dial to the “ENGINE STOP” position.

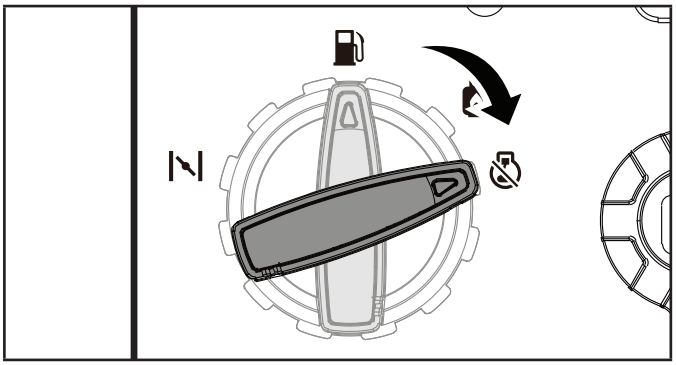

Mid Term Storage (30 days – 1 year)

Ethanol blended gasoline in the tank has a maximum shelf life of up to 1 year with the addition of a properly formulated fuel stabilizer and stored in a cool, dry place.

1. Be sure all appliances are disconnected from the generator.
2. Add a properly formulated fuel stabilizer to the gasoline tank.
3. Start engine by following directions in the *Starting the Engine* section.
4. Run the generator for 10 minutes so the treated gasoline cycles through the fuel system and carburetor.
5. Let the engine run until fuel starvation has stopped the engine.
6. After fuel has run out and the engine has stopped, turn the EZ Start dial to the “ENGINE STOP” position and allow the engine to cool.
7. Remove the maintenance cover on the left side of the control panel.
8. Remove the spark plug and pour about a tablespoon of oil into the cylinder.
9. Remove the recoil side cover and SLOWLY pull the recoil to rotate the engine to distribute and lubricate the cylinder.
10. Re-install the spark plug and spark plug wire.
11. Re-install the maintenance covers.
12. Clean the generator according to *Cleaning the Generator*.
13. Store the generator in a cool, dry place out of direct sunlight.

Long Term Storage (more than 1 year)

For storage over 1 year, the gasoline tank and carburetor must be completely drained of gasoline.

1. Be sure all appliances are disconnected from generator.
2. Place inverter on blocks to allow appropriate gasoline container or pan to slide under inverter.
3. Remove the maintenance cover on the left side of the control panel.
4. Turn the EZ Start dial to the “GASOLINE OPERATION” position.
5. Using a Phillips head screwdriver (not included), rotate drain screw counterclockwise (3) full turns. Gasoline will drain through clear tubing out underneath the inverter. Make sure draining gasoline empties into an appropriate container.

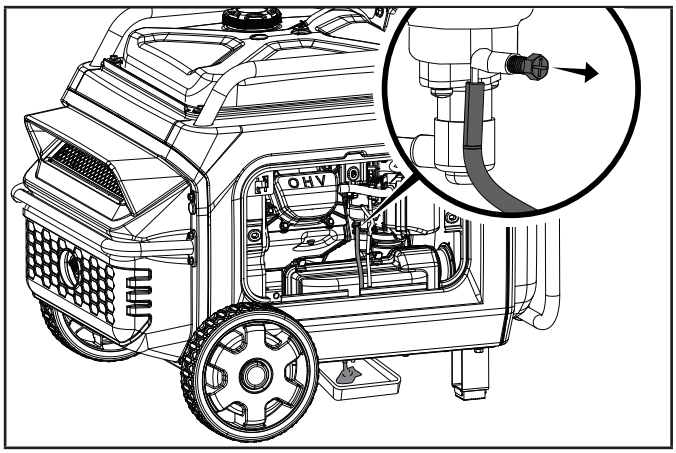

6. When gasoline stops flowing from the clear tube, rotate drain screw clockwise until tight. Properly dispose of the drained gasoline according to local regulations or guidelines.
7. Turn the EZ Start dial to the “ENGINE STOP” position.
8. Follow steps 9-14 according to *Mid* Term Storage.

LPG Storage

Always disconnect the LPG hose from the generator and shut off the LPG tank for proper storage.

Plug the outlet, usually by a plastic protective cap, if one is available. Always keep cylinders away from heat.

Removing from Storage: Gasoline

NOTICE

If the generator has been improperly stored for a period longer than 30 days with ethanol blended gasoline in the gasoline tank and/or carburetor, all fuel must be drained and the carburetor must be thoroughly cleaned of ethanol build up. This process involves technically advanced tasks. For assistance please call our Technical Support Team at 1-877-338-0999.

If the gasoline tank and carburetor were properly emptied of all ethanol blended gasoline prior to the generator being stored, follow the below steps when removing from storage.

1. Be sure the EZ Start dial is in the “ENGINE STOP” position.
2. Add gasoline to the generator according to *Add Fuel: Gasoline.*
3. Move the EZ Start dial to the “GASOLINE OPERATION” position.
4. After 5 minutes check the carburetor and air filter areas for any leaking gasoline. If any leaks are found, the carburetor will need to be disassembled and cleaned or replaced. If no gasoline leaks are found, turn the EZ Start dial to the “ENGINE STOP” position.
5. Check engine oil level and add clean, fresh oil if needed. See *Oil Specifications* for proper oil type.
6. Check and clear air filter of any obstructions such as bugs or cobwebs. If necessary, clean air filter according to *Cleaning the Air Filter*.
7. Start the generator according to *Starting the Engine*.

Removing from Storage: Propane (LPG)

Upon removal from storage, inspect LPG fittings and hose lines for leaks before using the generator.

WARNING

If there is a strong smell of LPG: Close valve on the cylinder. Check all connections for leaks by wetting the fittings with a solution of soap and water. Bubbles which appear or bubbles which grow indicate that a leak exists. Do not smoke or light a cigarette, or check for leaks using a match, open flame source or lighter. Contact a qualified technician to inspect and repair an LPG system if a leak is found, before using the generator.

SPECIFICATIONS

Generator Specifications

Generator Model	201175
Start Type	Electric, Manual
Watts (Starting/Running)	8500/7000
Watts (LPG) (Starting/Running)	8500/6300
AC Volts	120/240
AC Amps @ 120V (Running)	58.3
AC Amps @ 240V (Running)	29.2
Volts DC	12
DC Amps	8
Frequency	60 Hz
Phase	Single
Grounding Type	Neutral Bonded to Frame
Weight	213.8 lb. (97.0 kg)
Length	33.4 in. (84.8 cm)
Width	29.1 in. (74.0 cm)
Height	26.0 in. (66.1 cm)

Engine Specifications

Model	R420N-VP
Displacement	420 cc
Type	4-Stroke OHV

Spark Plug

OEM Type	F7RTC
Replacement Type	NGK BPR7HS or equivalent
Gap	0.0276-0.0315 in. (0.7-0.8 mm)

Valve

Intake Clearance	0.002-0.006 in. (0.05-0.15 mm)
Exhaust Clearance	0.002-0.006 in. (0.05-0.15 mm)

NOTICE

A technical bulletin regarding valve adjustment procedures is available at www.championpowerequipment.com.

Oil Specifications

DO NOT OVERFILL.

Type	*See following chart
Capacity	37.2 fl. oz. (1100 ml)

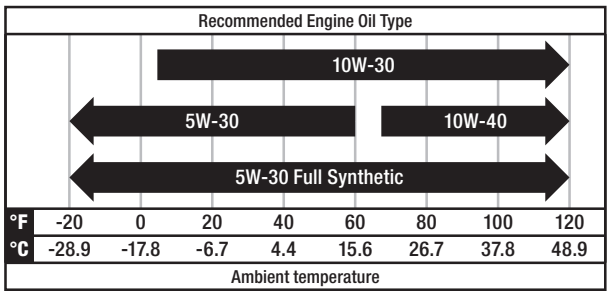

NOTICE

Temperature will affect engine oil and engine performance. Change the type of engine oil used based on temperature shown in the *"Recommended Engine Oil Type"* table.

Fuel Specifications

Use unleaded gasoline with a minimum octane rating of 87 and an ethanol content of 10% or less by volume. DO NOT USE E15 or E85. DO NOT OVERFILL.

Gasoline Capacity	5.33 gal. (20.20 L)

Battery Specifications

Type	Rechargeable, Non-Spillable Lead Acid
Volts DC	12
Capacity	9 Ah

Temperature Specifications

Starting Temperature Range (°F/°C)	5 to 104/-15 to 40

NOTICE

An important message about temperature: Your product is designed and rated for continuous operation at ambient temperatures up to 104°F (40°C). When needed, it may be operated at temperatures ranging from 5°F (-15°C) to 122°F (50°C) for short periods of time. If exposed to temperatures outside this range during storage, it should be brought back within this range before operation. In any event, the product must always be operated outdoors, in a well-ventilated area and away from doors, windows and vents.

TROUBLESHOOTING

Problem	Cause	Solution
Engine will not start.	No fuel.	Add fuel.
	Faulty spark plug.	Clean and adjust spark plug or replace.
	Low oil level.	Fill crankcase to the proper level.
		Place generator on a flat, level surface.
	Spark plug wire loose.	Attach wire to spark plug.
	Fuel valve is closed.	Open fuel valve.
	EZ Start dial OFF.	Turn EZ Start dial ON.
	Old fuel or water in fuel.	Drain fuel and replace with fresh fuel.
	Flooded with fuel.	Let unit stand for 10 mins.
	CO Shield® module has been removed or tampered with.	Re-install module or contact technical support.
Engine starts but runs roughly.	Choke in the wrong position.	Move EZ Start Dial to the RUN position.
	Dirty air filter.	Clean or replace air filter.
	Dirty fuel valve.	Clean the fuel valve.
	Clogged spark arrestor.	Clean spark arrestor.
Engine will not start electrically.	Generator battery is dead.	Recharge generator battery.
Engine shuts down during operation.	Out of fuel.	Fill fuel tank.
	Low oil level.	Fill crankcase to the proper level. Place generator on a flat, level surface.
	If equipped, when CO Shield® shutoffs occur due to accumulating carbon monoxide (CO) and if the red LED light blinks on the panel.	Move generator to an open, outdoor area. Point exhaust away from people and buildings. Move to fresh air and get medical help if sick, dizzy, or weak. Make sure there are no objects creating obstructions within 5 feet of the generator. Obstructions in the vicinity of the generator may trap carbon monoxide emissions near the generator and cause the engine to shutoff. If the generator's exhaust is facing into the wind, the exhaust may be blown back into the generator's operating area, creating an accumulation of CO emissions and triggering an engine shutoff. To avoid an engine shutoff, turn the generator 45° in either direction to allow the exhaust emissions to blow away from the generator. If engine shutoff events continue, readjust and align the exhaust with the wind direction to blow away from the generator.
	If equipped, when CO Shield® shutoffs occur due to system fault and if the yellow LED light blinks on the panel.	Start by confirming yellow LED light blinks when/ if generator shuts off. If CO Shield continues to sense the fault and shuts off, contact technical support.
	Clogged spark arrestor.	Clean spark arrestor.

Problem	Cause	Solution
Engine starts and shuts off right away.	If equipped, when CO Shield® shutoffs occur due to accumulating carbon monoxide (CO) and if the red LED light blinks on the panel.	Move generator to an open, outdoor area. Point exhaust away from people and buildings. Move to fresh air and get medical help if sick, dizzy, or weak. Make sure there are no objects creating obstructions within 5 feet of the generator. Obstructions in the vicinity of the generator may trap carbon monoxide emissions near the generator and cause the engine to shutoff. If the generator's exhaust is facing into the wind, the exhaust may be blown back into the generator's operating area, creating an accumulation of CO emissions and triggering an engine shutoff. To avoid an engine shutoff, turn the generator 45° in either direction to allow the exhaust emissions to blow away from the generator. If engine shutoff events continue, readjust and align the exhaust with the wind direction to blow away from the generator.
	If equipped, when CO Shield® shutoffs occur due to system fault and if the yellow LED light blinks on the panel.	Start by confirming yellow LED light blinks when/ if generator shuts off. If CO Shield continues to sense the fault and shuts off, contact technical support.
Generator cannot supply enough power or overheating.	Generator is overloaded.	Review load and adjust. See "*Connecting Electrical Loads.*"
	Dirty air filter.	Clean or replace air filter.
	Choke in wrong position.	Move EZ Start Dial to the RUN position.
Engine is running but no AC output.	Poor cord connection.	Check all connections.
	Circuit breaker is open.	Reset circuit breaker. Check all circuit breakers.
	Loose wiring.	Inspect and tighten wiring connections.
	AC Overload: Button illuminated red	Reduce AC load and press Overload Reset Button until illuminated green.
	Other.	Contact the help line.
Engine hunts or falters.	Engine governor defective.	Contact the help line.
	Dirty fuel valve.	Clean the fuel valve.
	Carburetor is dirty and running lean.	Contact the help line.
	Choke in wrong position.	Move EZ Start Dial to the RUN position.
DUAL FUEL MODELS ONLY: Engine will not stop.	Propane valve is still open.	Turn the propane valve to the CLOSED position on the tank.
Repeated circuit breaker tripping.	Overload.	Review load and adjust. See "Connecting Electrical Loads."
	Faulty power cords or device.	Check for damaged, bare or frayed wires. Replace defective device.
	Circuit breaker still too hot.	Let unit sit for 5 mins.

For other issues and technical support:

Technical Support Team
Toll Free 1-877-338-0999
support@championpowerequipment.com

WARRANTY*

CHAMPION POWER EQUIPMENT
3 YEAR LIMITED WARRANTY

Warranty Qualifications

To register your product for warranty and FREE lifetime call center technical support please visit:
https://www.championpowerequipment.com/register

To complete registration you will need to include a copy of the purchase receipt as proof of original purchase. Proof of purchase is required for warranty service. Please register within ten (10) days from date of purchase.

Repair/Replacement Warranty

CPE warrants to the original purchaser that the mechanical and electrical components will be free of defects in material and workmanship for a period of three years (parts and labor) from the original date of purchase and 270 days (parts and labor) for commercial and industrial use. Transportation charges on product submitted for repair or replacement under this warranty are the sole responsibility of the purchaser. This warranty only applies to the original purchaser and is not transferable.

Do Not Return The Unit To The Place Of Purchase

Contact CPE's Technical Service and CPE will troubleshoot any issue via phone or e-mail. If the problem is not corrected by this method, CPE will, at its option, authorize evaluation, repair or replacement of the defective part or component at a CPE Service Center. CPE will provide you with a case number for warranty service. Please keep it for future reference. Repairs or replacements without prior authorization, or at an unauthorized repair facility, will not be covered by this warranty.

Warranty Exclusions

This warranty does not cover the following repairs and equipment:

Normal Wear

Products with mechanical and electrical components need periodic parts and service to perform well. This warranty does not cover repair when normal use has exhausted the life of a part or the equipment as a whole.

Installation, Use and Maintenance

This warranty will not apply to parts and/or labor if the product is deemed to have been misused, neglected, involved in an accident, abused, loaded beyond the product's limits, modified, installed improperly or connected incorrectly to any electrical component. Normal maintenance is not covered by this warranty and is not required to be performed at a facility or by a person authorized by CPE.

Other Exclusions

This warranty excludes:

- Cosmetic defects such as paint, decals, etc.
- Wear items such as filter elements, o-rings, etc.
- Accessory parts such as starting batteries, and storage covers.
- Failures due to acts of God and other force majeure events beyond the manufacturer's control.
- Problems caused by parts that are not original Champion Power Equipment parts.

When applicable, this warranty does not apply to products used for prime power in place of a utility.

Limits of Implied Warranty and Consequential Damage

Champion Power Equipment disclaims any obligation to cover any loss of time, use of this product, freight, or any incidental or consequential claim by anyone from using this product.
THIS WARRANTY AND THE ATTACHED U.S. EPA and/or CARB EMISSION CONTROL SYSTEM WARRANTIES (WHEN APPLICABLE) ARE IN LIEU OF ALL OTHER WARRANTIES, EXPRESS OR IMPLIED, INCLUDING WARRANTIES OF MERCHANTABILITY OR FITNESS FOR A PARTICULAR PURPOSE.

A unit provided as an exchange will be subject to the warranty of the original unit. The length of the warranty governing the exchanged unit will remain calculated by reference to the purchase date of the original unit.

This warranty gives you certain legal rights which may change from state to state or province to province. Your state or province may also have other rights you may be entitled to that are not listed within this warranty.

Contact Information

Address

Champion Power Equipment, Inc.
12039 Smith Ave.
Santa Fe Springs, CA 90670 USA
www.championpowerequipment.com

Customer Service

Toll Free: 1-877-338-0999
info@championpowerequipment.com
Fax no.: 1-562-236-9429

Technical Service

Toll Free: 1-877-338-0999
tech@championpowerequipment.com
❗ EMERGENCY 24 HOUR SUPPORT: 1-562-204-1188

*Except as otherwise stipulated in any of the following enclosed Emission Control System Warranties (when applicable) for the Emission Control System: U.S. Environment Protection Agency (EPA) and/or California Air Resources Board (CARB).

CHAMPION POWER EQUIPMENT, INC. (CPE)
AND THE UNITED STATES ENVIRONMENTAL PROTECTION AGENCY (U.S. EPA)
EMISSION CONTROL SYSTEM WARRANTY

Your Champion Power Equipment (CPE) engine complies with U.S. EPA emissions regulations.

YOUR WARRANTY RIGHTS AND OBLIGATIONS:

The US EPA and CPE are pleased to explain the Federal Emission Control Systems Warranty on your 2023 small off-road engine (SORE) and engine powered equipment. New engines and equipment must be designed, built and equipped, at the time of sale, to meet U.S. EPA regulations for small off-road engines (SORE). CPE warrants the emission control system on your small off-road engine (SORE) and equipment for the period of time listed below, provided there has been no abuse, neglect, unapproved modification, or improper maintenance of your equipment.

Your emission control system may include parts such as the carburetor, fuel-injection system, the ignition system, catalytic converter and fuel lines. Also included may be hoses, belts, connectors and other emission related assemblies. Where a warrantable condition exits, CPE will repair your small off-road engine (SORE) at no cost to you including diagnosis, parts and labor.

MANUFACTURER'S EMISSION CONTROL SYSTEM WARRANTY COVERAGE:

This emission control system is warranted for two years, subject to provisions set forth below. If, during the warranty period, an emission related part on your engine is defective in materials or workmanship, the part will be repaired or replaced by CPE.

OWNER WARRANTY RESPONSIBILITIES:

As the small off-road engine (SORE) owner, you are responsible for the performance of the required maintenance listed in your Owner's Manual. CPE recommends that you retain all your receipts covering maintenance on your small off-road engine, but CPE cannot deny warranty solely for the lack of receipts or for your failure to ensure the performance of all scheduled maintenance.

As the small off-road engine (SORE) owner, you should however be aware that CPE may deny you warranty coverage if your small, off-road engine (SORE) or a part has failed due to abuse, neglect, improper maintenance or unapproved modifications.

You are responsible for presenting your small off-road engine (SORE) to an Authorized CPE service outlet or alternate service outlet as described in (3)(f.) below, CPE dealer or CPE, Santa Fe Springs, Ca. as soon as a problem exists. The warranty repairs should be completed in a reasonable amount of time, not to exceed 30 days.

If you have any questions regarding your warranty rights and responsibilities, you should contact:

Champion Power Equipment, Inc.
Customer Service
12039 Smith Ave.
Santa Fe Springs, CA 90670
1-877-338-0999
tech@championpowerequipment.com

EMISSION CONTROL SYSTEM WARRANTY

The following are specific provisions relative to your Emission Control System (ECS) Warranty Coverage.

1. **APPLICABILITY:** This warranty shall apply to 1997 and later model year small off-road engines (SORE). The ECS Warranty Period shall begin on the date the new engine or equipment is delivered to its original, end-use purchaser, and shall continue for 24 consecutive months thereafter.

2. **GENERAL EMISSIONS WARRANTY COVERAGE**
   CPE warrants to the original, end-use purchaser of the new engine or equipment and to each subsequent purchaser that each of its small off-road engines (SORE) is:

   2a. Designed, built and equipped so as to conform to U.S. EPA emissions standards for spark-ignited engines at or below 19 kilowatts.

   2b. Free from defects in materials and workmanship that cause the failure of a warranted part to be identical in all material respects to the part as described in the engine manufacturer's application for certification for a period of two years.

3. **THE WARRANTY ON EMISSION-RELATED PARTS WILL BE INTERPRETED AS FOLLOWS:**

   3a. Any warranted part that is not scheduled for replacement as required maintenance in the Owners Manual shall be warranted for the ECS Warranty Period. If any such part fails during the ECS Warranty Period, it shall be repaired or replaced by CPE according to Subsection "d" below. Any such part repaired or replaced under the ECS Warranty shall be warranted for any remainder of the ECS Warranty Period.

   3b. Any warranted, emissions-related part which is scheduled only for regular inspection as specified in the Owners Manual shall be warranted for the ECS Warranty Period. A statement in such written instructions to the effect of "repair or replace as necessary", shall not reduce the ECS Warranty Period. Any such part repaired or replaced under the ECS Warranty shall be warranted for the remainder of the ECS Warranty Period.

   3c. Any warranted, emissions-related part which is scheduled for replacement as required maintenance in the Owner's Manual shall be warranted for the period of time prior to the first scheduled replacement point for that part. If the part fails prior to the first scheduled replacement, the part shall be repaired or replaced by CPE according to Subsection "d" below. Any such emissions-related part repaired or replaced under the ECS Warranty, shall be warranted for the remainder of the ECS Warranty Period prior to the first scheduled replacement point for such emissions-related part.

   3d. Repair or replacement of any warranted, emissions-related part under this ECS Warranty shall be performed at no charge to the owner at a CPE Authorized Service Outlet.

   3e. The owner shall not be charged for diagnostic labor which leads to the determination that a part covered by the ECS Warranty is in fact defective, provided that such diagnostic work is performed at a CPE Authorized Service Outlet.

   3f. CPE shall pay for covered emissions warranty repairs at non-authorized service outlets under the following circumstances:

      i. The service is required in a population center with a population over 100,000 according to U.S. Census 2000 without a CPE Authorized Service Outlet AND

      ii. The service is required more than 100 miles from a CPE Authorized Service Outlet. The 100 mile limitation does not apply in the following states: Alaska, Arizona, Colorado, Hawaii, Idaho, Montana, Nebraska, Nevada, New Mexico, Oregon, Texas, Utah and Wyoming.

   3g. CPE shall be liable for damages to other original engine components or approved modifications proximately caused by a failure under warranty of an emission-related part covered by the ECS Warranty.

   3h. Throughout the ECS Warranty Period, CPE shall maintain a supply of warranted emission-related parts sufficient to meet the expected demand for such emission-related parts.

   3i. Any CPE Authorized and approved emission-related replacement part may be used in the performance of any ECS Warranty maintenance or repair and will be provided without charge to the owner. Such use shall not reduce CPE's warranty obligation.

   3j. Unapproved add-on or modified parts may not be used to modify or repair a CPE engine. Such use voids this ECS Warranty and shall be sufficient grounds for disallowing an ECS Warranty claim. CPE shall not be liable hereunder for failures of any warranted parts of a CPE engine caused by the use of such an unapproved add-on or modified part.

EMISSION-RELATED PARTS INCLUDE THE FOLLOWING: (using those portions of the list applicable to the engine)

Systems covered by this warranty	Parts Description
Fuel Metering System	Fuel regulator, Carburetor and internal parts
Air Induction System	Air cleaner, Intake manifold
Ignition System	Spark plug and parts, Magneto ignition system
Exhaust System	Exhaust manifold, catalytic converter
Miscellaneous Parts	Tubing, Fittings, Seals, Gaskets, and Clamps associated with these listed systems.
Evaporative Emissions	Fuel Tank, Fuel Cap, Fuel Lines (for liquid fuel and fuel vapors), Fuel Line Fittings, Clamps, Pressure Relief Valves, Control Valves, Control Solenoids, Electronic Controls, Vacuum Control Diaphragms, Control Cables, Control Linkages, Purge Valves, Gaskets, Liquid/Vapor Separator, Carbon Canister, Canister Mounting Brackets, Carburetor Purge Port Connector

TO OBTAIN WARRANTY SERVICE:

You must take your CPE engine or the product on which it is installed, along with your warranty registration card or other proof of original purchase date, at your expense, to any Champion Power Equipment dealer who is authorized by Champion Power Equipment, Inc. to sell and service that CPE product during his normal business hours. Alternate service locations defined in Section (3)(f.) above must be approved by CPE prior to service. Claims for repair or adjustment found to be caused solely by defects in material or workmanship will not be denied because the engine was not properly maintained and used.

If you have any questions regarding your warranty rights and responsibilities, or to obtain warranty service, please write or call Customer Service at Champion Power Equipment, Inc.

Champion Power Equipment, Inc.
12039 Smith Ave.
Santa Fe Springs, CA 90670
1-877-338-0999
Attn.: Customer Service
tech@championpowerequipment.com